EITEL-McCULLOUGH, INC.
SAN CARLOS · CALIFORNIA

4CX5000A

RADIAL-BEAM POWER TETRODE

The Eimac 4CX5000A is a compact high-power ceramic and metal tetrode cooled by forced air. It is useful as an oscillator, amplifier, or modulator at frequencies up to 110 megacycles and is particularly suited for use as a linear single-sideband amplifier, class-AB$_1$ audio amplifier, or as a screen-modulated radio-frequency amplifier.

A pair of these tubes will deliver 17.5 kilowatts of audio-frequency or radio-frequency power with zero driving power. The rated plate dissipation is five kilowatts for most classes of service and six kilowatts for class-AB operation.

GENERAL CHARACTERISTICS

ELECTRICAL

	Min.	Nom.	Max.	
Filament: Thoriated Tungsten				
Voltage		7.5		volts
Current	73		78	amperes
Amplification Factor (Grid-Screen)	4.25		5.0	
Direct Interelectrode Capacitances, Grounded Cathode:				
Input		106		uuf
Output		18		uuf
Feedback		0.75		uuf

Direct Interelectrode Capacitances, Grounded Grid and Screen:	Nom.	
Input	47	uuf
Output	18	uuf
Feedback	0.14	uuf

MECHANICAL

Base	Special concentric
Maximum Seal Temperature	250° C
Maximum Anode-Core Temperature	250° C
Recommended Socket	Eimac SK-300
Operating Position	Axis vertical, base up or down
Maximum Dimensions:	
Height	9.13 inches
Diameter	4.94 inches
Cooling	Forced air
Net Weight	9.5 pounds
Shipping Weight (Approximate)	22 pounds

RADIO-FREQUENCY POWER AMPLIFIER OR OSCILLATOR (Up to 30 megacycles)

Class-C Telegraphy (Key-down conditions)

MAXIMUM RATINGS

D-C PLATE VOLTAGE	7500 MAX. VOLTS
D-C SCREEN VOLTAGE	1500 MAX. VOLTS
D-C PLATE CURRENT	3 MAX. AMPERES
PLATE DISSIPATION	5000 MAX. WATTS
SCREEN DISSIPATION	250 MAX. WATTS
GRID DISSIPATION	75 MAX. WATTS

TYPICAL OPERATION
(Frequencies below 30 megacycles)

D-C Plate Voltage	7500	volts
D-C Screen Voltage	500	volts
D-C Grid Voltage	—350	volts
D-C Plate Current	2.8	amperes
D-C Screen Current	0.5	ampere
D-C Grid Current	0.25	ampere
Peak R-F Grid Voltage	590	volts
Driving Power	150	watts
Plate Dissipation	5000	watts
Plate Output Power	16,000	watts

(Effective 3-15-60) Copyright, 1956 by Eitel-McCullough, Inc.

RADIO FREQUENCY POWER AMPLIFIER OR OSCILLATOR (From 30 to 110 megacycles)

Class-C Telegraphy or FM Telephony (Key-down conditions)

MAXIMUM RATINGS

D-C PLATE VOLTAGE:	
30 to 60 megacycles	7000 MAX. VOLTS
60 to 110 megacycles	6500 MAX. VOLTS
D-C SCREEN VOLTAGE	1500 MAX. VOLTS
D-C PLATE CURRENT:	
30 to 60 megacycles	2.8 MAX. AMPERES
60 to 110 megacycles	2.6 MAX. AMPERES
PLATE DISSIPATION	5000 MAX. WATTS
SCREEN DISSIPATION	250 MAX. WATTS
GRID DISSSIPATION	75 MAX. WATTS

TYPICAL OPERATION (Frequencies between 88 and 108 megacycles)

D-C Plate Voltage	6500	volts
D-C Screen Voltage	750	volts
D-C Grid Voltage	—350	volts
D-C Plate Current	2.3	amperes
D-C Screen Current	0.2	ampere
D-C Grid Current	0.05	ampere
Driving Power	25	watts
Useful Output Power	10,000	watts

PLATE-MODULATED RADIO-FREQUENCY POWER AMPLIFIER

Class-C Telephony (Carrier conditions except where noted)

MAXIMUM RATINGS

D-C PLATE VOLTAGE	5000 MAX. VOLTS
D-C SCREEN VOLTAGE	1000 MAX. VOLTS
D-C PLATE CURRENT	2.5 MAX. AMPERES
PLATE DISSIPATION*	3500 MAX. WATTS
SCREEN DISSIPATION	250 MAX. VOLTS
GRID DISSIPATION	75 MAX. WATTS

*Corresponds to 5000 watts at 100-percent sine-wave modulation.

TYPICAL OPERATION (Frequencies below 30 megacycles)

D-C Plate Voltage	5000	volts
D-C Screen Voltage	500	volts
Peak A-F Screen Voltage (For 100-percent modulation)	450	Volts
D-C Grid Voltage	—400	volts
D-C Plate Current	1.4	amperes
D-C Screen Current	0.26	ampere
D-C Grid Current	0.05	ampere
Peak R-F Grid Voltage	520	volts
Grid Driving Power	25	watts
Plate Dissipation	1100	watts
Plate Output Power	5.8	kilowatts

SCREEN-MODULATED RADIO-FREQUENCY POWER AMPLIFIER

(Carrier conditions except where noted)

MAXIMUM RATINGS, Class-C Telephony (Per Tube)

D-C PLATE VOLTAGE	7500 MAX. VOLTS
D-C SCREEN VOLTAGE	750 MAX. VOLTS
D-C PLATE CURRENT	3.0 MAX. AMPERES
PLATE DISSIPATION	5000 MAX. WATTS
GRID DISSIPATION	75 MAX. WATTS

TYPICAL OPERATION (Frequencies below 30 megacycles, per tube)

D-C Plate Voltage	7500	7500	volts
D-C Screen Voltage	350	350	volts
Peak A-F Screen Voltage (For 100-percent modulation)	550	550	volts
D-C Grid Voltage	—300	—300	volts
D-C Plate Current	0.9	1.14	amperes
D-C Screen Current*	—0.01	—0.01	amperes
D-C Grid Current	0.015	0.03	amperes
Peak R-F Grid Voltage	350	375	volts
Grid Driving Power	7	11	watts
R-F Load Impedance	2000	1600	ohms
Plate Dissipation	4000	5000	watts
Useful Output Power	2750	3550	watts

*D-C Screen Current is a function of loading; values of plus or minus 20 milliamperes may be considered typical at carrier level.

NOTE: Two tubes can be employed under conditions listed in the first column to obtain more than five kilowatts plate output power. Likewise, three tubes can be utilized at conditions listed in the second column to obtain better than ten kilowatts output power.

AUDIO-FREQUENCY AMPLIFIER OR MODULATOR

Class-AB_1

MAXIMUM RATINGS (Per Tube)

D-C PLATE VOLTAGE	7500 MAX. VOLTS
D-C SCREEN VOLTAGE	1500 MAX. VOLTS
D-C PLATE CURRENT	4.0 MAX. AMPERES
PLATE DISSIPATION	6000 MAX. WATTS
SCREEN DISSIPATION	250 MAX. WATTS
GRID DISSIPATION	75 MAX. WATTS

TYPICAL OPERATION, two tubes

D-C Plate Voltage	4000	5000	6000	7000	volts
D-C Screen Voltage	1250	1250	1250	1250	volts
D-C Grid Voltage	—270	—280	—310	—325	volts
Max.-Signal Plate Current	5.10	4.40	4.25	3.65	amperes
Zero-Signal Plate Current	1.25	1.00	0.83	0.70	amperes
Max-Signal Screen Current	0.35	0.33	0.30	0.24	amperes
Zero-Signal Screen Current	0	0	0	0	amperes
Peak A-F Driving Voltage	250	240	270	235	volts
Driving Power	0	0	0	0	watts
Load Resistance, Plate-to-Plate	1500	2370	2940	4100	ohms
Max.-Signal Plate Dissipation	4200	4200	4200	4200	watts
Max.-Signal Plate Output Power	11,500	13,500	17,000	17,500	watts

RADIO-FREQUENCY LINEAR AMPLIFIER

Class-AB_1

MAXIMUM RATINGS

D-C PLATE VOLTAGE	7500 MAX. VOLTS
D-C SCREEN VOLTAGE	1500 MAX. VOLTS
D-C PLATE CURRENT	4.0 MAX. AMPERES
PLATE DISSIPATION	6000 MAX. WATTS
SCREEN DISSIPATION	250 MAX. WATTS
GRID DISSIPATION	75 MAX. WATTS

TYPICAL OPERATION, Peak-Envelope or Modulation-Crest Conditions, (Frequencies below 30 megacycles)

D-C Plate Voltage	7500	volts
D-C Screen Voltage	1250	volts
D-C Grid Voltage*	—300	volts
Max.-Signal Plate Current	1.9	amperes
Zero-Signal Plate Current	0.50	ampere
Max.-Signal Screen Current	0.20	ampere
Peak R-F Grid Voltage	300	volts
Driving Power	0	watts
Plate Dissipation	4200	watts
Plate Output Power**	10,000	watts

*Adjust grid voltage to obtain specified Zero-Signal plate current.
**PEP output or r-f output power at crest of modulation envelope.

NOTE: In most cases, "TYPICAL OPERATION" data are obtained by calculation from published characteristic curves and confirmed by direct tests. No allowance for circuit losses, either input or output, has been made. Exceptions are distinguished by a listing of "Useful" output power as opposed to "Plate" output power. Values appearing in these groups have been obtained from existing equipment(s) and the output power is that measured at the load.

APPLICATION

MECHANICAL

Mounting—The 4CX5000A must be operated with its axis vertical. The base of the tube may be down or up at the convenience of the circuit designer.

Socket—The Eimac Air-System Socket Type SK-300 is designed especially for the concentric base terminals of the 4CX5000A. The use of recommended air-flow rates through this socket provides effective forced-air cooling of the tube. Air forced into the bottom of the socket passes over the tube terminals and through an Air Chimney, the SK-306, into the anode cooling fins.

Cooling—The maximum temperature rating for the external surfaces of the 4CX5000A is 250°C. Sufficient forced-air circulation must be provided to keep the temperature of the anode at the base of the cooling fins and the temperature of the ceramic-metal seals below 250°C. Air-flow requirements to maintain seal temperatures at 200°C in 50°C ambient air are tabulated below.

	SEA LEVEL		10,000 FEET	
Plate Dissipation* (Watts)	Air Flow (CFM)	Pressure Drop (Inches of water)	Air Flow (CFM)	Pressure Drop (Inches of water)
2000	100	0.6	146	0.9
3000	160	1.4	230	2.0
4000	230	2.8	330	4.0
5000	310	4.0	450	5.8
6000	400	5.1	580	7.4

*Since the power dissipated by the filament represents about 560 watts and since grid-plus-screen dissipation can, under some conditions, represent another 200 to 300 watts, allowance has been made in preparing this tabulation for an additional 1000 watts dissipation.

The blower selected in a given application must be capable of supplying the desired air flow at a back pressure equal to the pressure drop shown above plus any drop encountered in ducts and filters.

At other altitudes and ambient temperatures the flow rate must be increased to obtain equivalent cooling. The flow rate and corresponding pressure differential must be determined individually in such cases, using maximum rated temperatures as the criteria for satisfactory cooling.

ELECTRICAL

Filament Operation—The rated filament voltage for the 4CX5000A is 7.5 volts. Filament voltage, as measured at the socket, should be maintained at this value to obtain maximum tube life. In no case should it be allowed to deviate by more than 5 percent from the rated value.

Electrode Dissipation Ratings—The maximum dissipation ratings for the 4CX5000A must be respected to avoid damage to the tube. An exception is the plate dissipation, which may be permitted to rise above the maximum rating during brief periods, such as may occur during tuning.

Control Grid Operation—The 4CX5000A control grid has a maximum dissipation rating of 75 watts. Precautions should be observed to avoid exceeding this rating. The grid bias and driving power should be kept near the values shown in the "Typical Operation" sections of the data sheet whenever possible.

Screen-Grid Operation—The power dissipated by the screen of the 4CX5000A must not exceed 250 watts.

Screen dissipation, in cases where there is no ac applied to the screen, is the simple product of the screen voltage and the screen current. If the screen voltage is modulated, the screen dissipation will depend upon loading, driving power, and carrier screen voltage.

Screen dissipation is likely to rise to excessive values when the plate voltage, bias voltage, or plate load are removed with filament and screen voltages applied. Suitable protective means must be provided to limit the screen dissipation to 250 watts in the event of circuit failure.

Plate Dissipation—The plate-dissipation rating for the 4CX5000A is 5000 watts for most applications but for audio and SSB amplifier applications, the maximum allowable dissipation is 6000 watts.

When the 4CX5000A is operated as a plate-modulated r-f power amplifier, the input power is limited by conditions not connected with the plate efficiency, which is quite high. Therefore, except during tuning there is little possibility that the 3500-watt maximum plate dissipation rating will be exceeded.

Special Applications—If it is desired to operate this tube under conditions widely different from those given here, write to the Application Engineering Department, Eitel-McCullough, Inc., 301 Industrial Road, San Carlos, California, for information and recommendations.

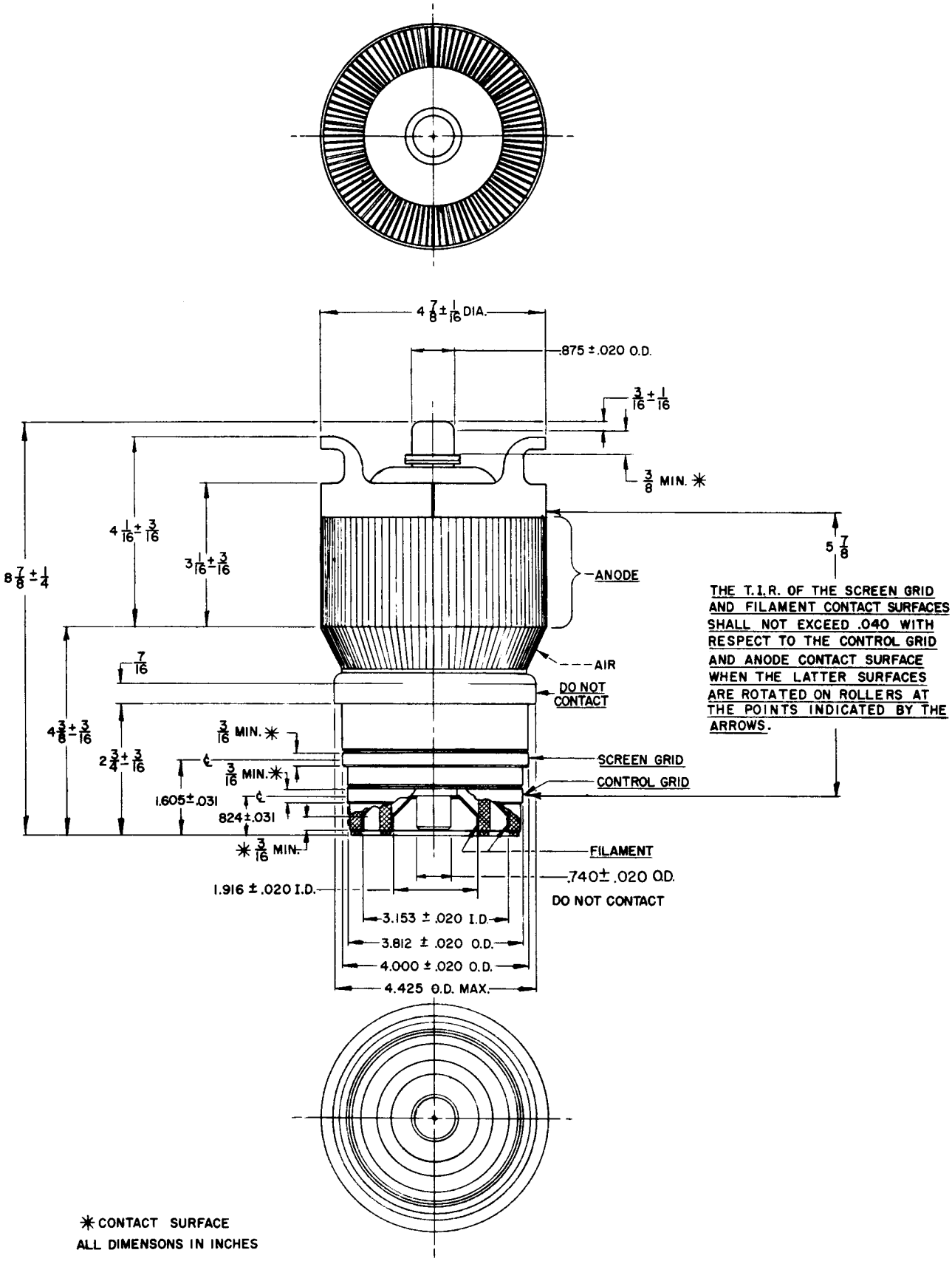

✳ CONTACT SURFACE
ALL DIMENSONS IN INCHES

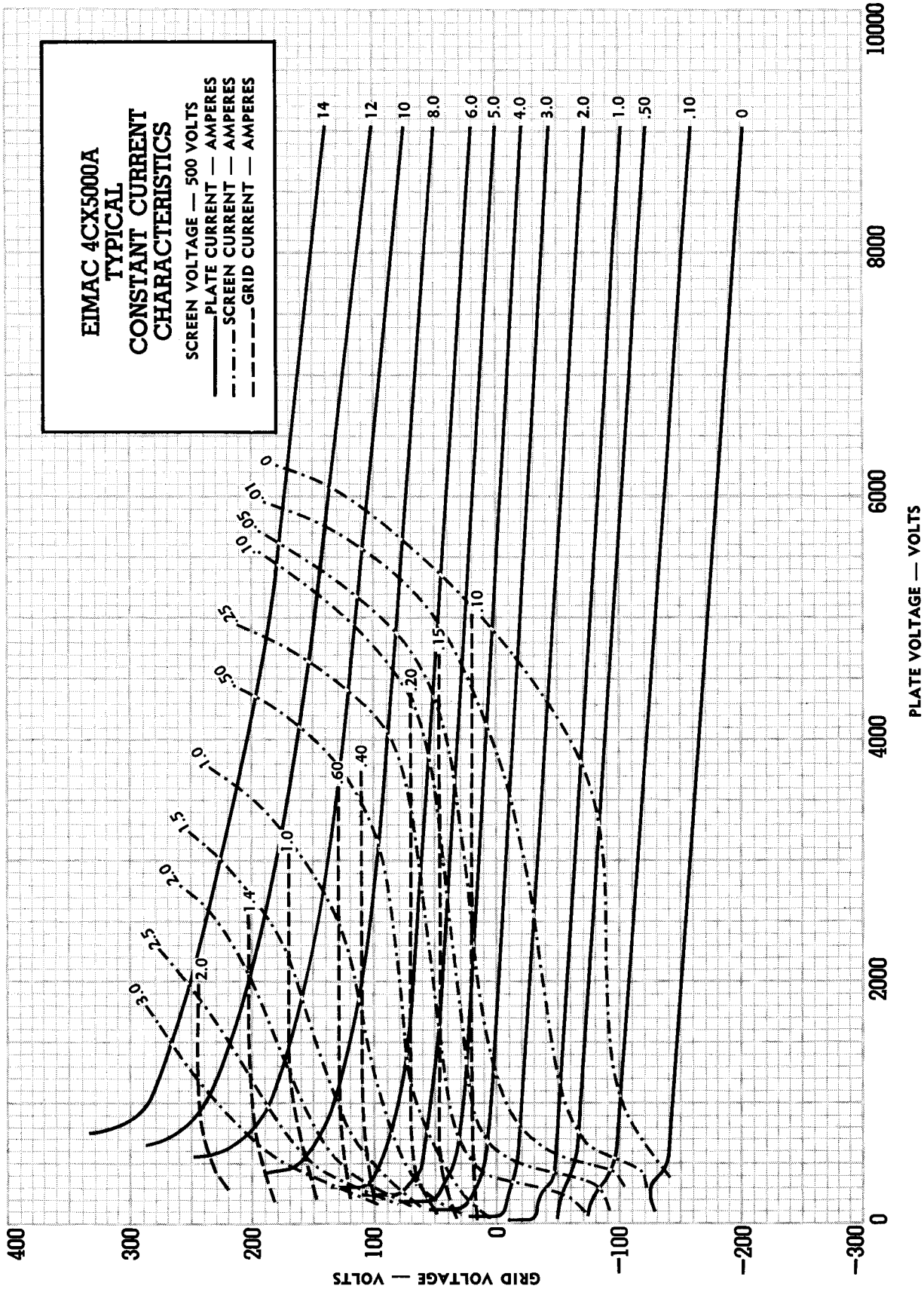
EIMAC 4CX5000A
TYPICAL
CONSTANT CURRENT
CHARACTERISTICS
SCREEN VOLTAGE — 500 VOLTS
PLATE CURRENT — AMPERES
SCREEN CURRENT — AMPERES
GRID CURRENT — AMPERES
14
12
10
8.0
6.0
5.0
4.0
3.0
2.0
1.0
.50
.10
0
PLATE VOLTAGE — VOLTS
0
2000
4000
6000
8000
10000
GRID VOLTAGE — VOLTS
400
300
200
100
0
−100
−200
−300

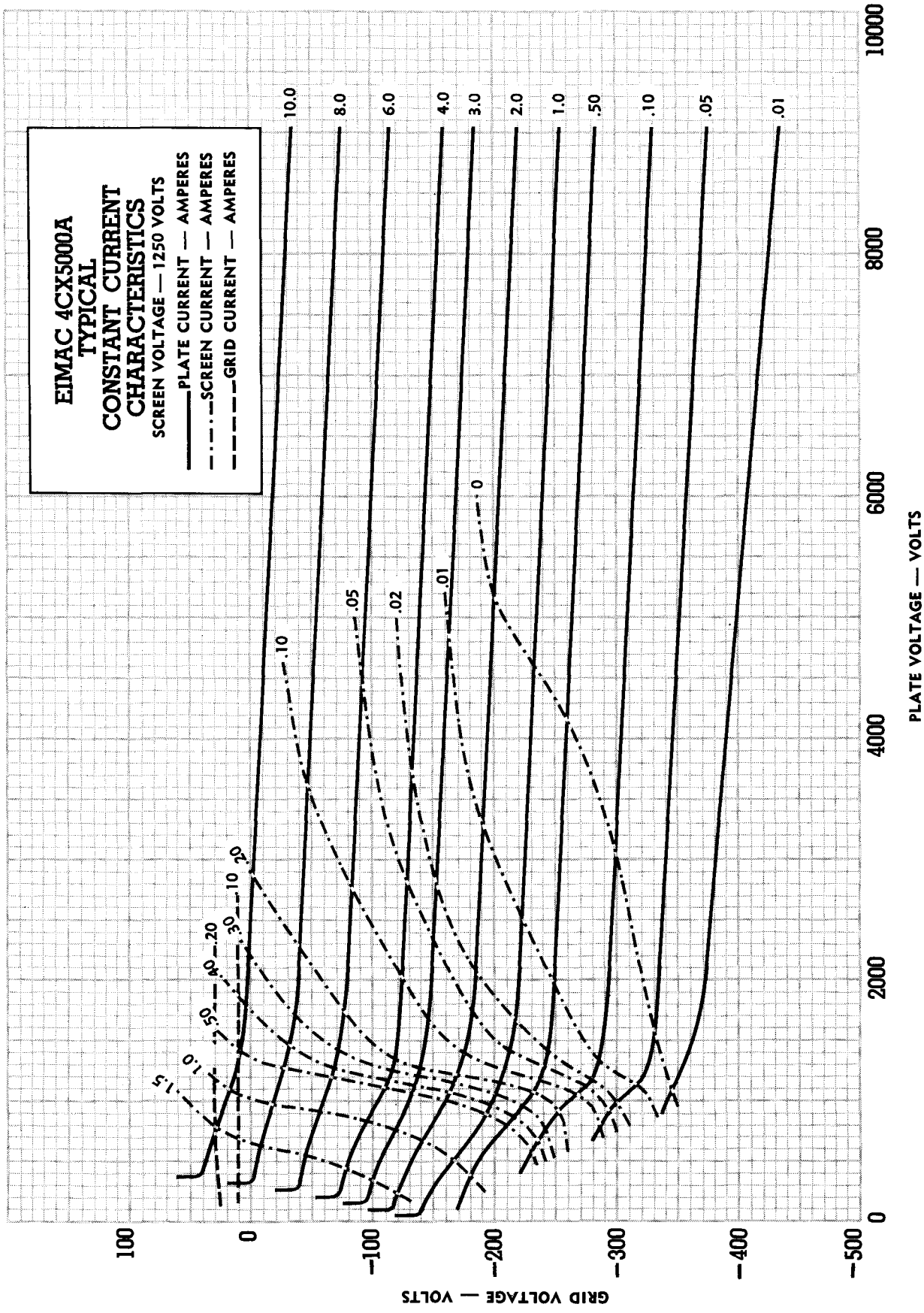

Printed in U.S.A. 5415