4CX35,000C

R.F. POWER TETRODE

Service Type CV11107

The data should be read in conjunction with the Power Tetrode Preamble.

ABRIDGED DATA

Forced-air cooled tetrode, coaxial metal-ceramic envelope, for audio amplifiers, r.f. linear amplifiers or class C amplifiers or oscillators.

Anode dissipation (class C telegraphy)	35	kW max
Anode voltage	20	kV max
Frequency for full ratings	30	MHz max
Output power (class C telegraphy)	82.5	kW

GENERAL

Electrical

Filament	thoriated tungsten	
Filament voltage (see note 1)	10	V
Filament current	300	A
Grid-screen amplification factor	4.5	
Inter-electrode capacitances, grounded filament.		
grid to anode	2.4	pF
input	465	pF
output	55	pF

Mechanical

Overall length	17.500 inches (444.5mm) max
Overall diameter	9.750 inches (247.7mm) max
Net weight	50 pounds (23kg) approx
Mounting position	vertical, either way up

Accessories

Sockets (see pages 10–12)	MA166A or MA166B
Clamping device to secure valve in socket (optional)	MA233

COOLING

Sufficient air must be passed over the base terminals and through the radiator fins to maintain the temperatures of the ceramic to metal seals and the radiator core below the maximum rated value of 250°C.

Using socket type MA166 or MA166B, 60 to 100ft^3/min (1.70 to 2.83m^3/min) of air will be required for base cooling. This should be blown horizontally through the socket from two diametrically opposed nozzles. It is also necessary to direct 2ft^3/min (0.06m^3/min) of air into the centre hole of the socket.

The air flows required to maintain the seal and radiator core temperatures at 225°C in an ambient temperature of 40°C at sea level and with an operating frequency of less than 30MHz are given below. The values specified are for air flowing in the direction from base to anode. At higher ambient temperatures or altitudes the rate of flow must be adjusted to give equivalent cooling and should be determined individually in each case. An allowance of 5250 watts for the power dissipated by the filament and grids has been made in the values given.

Anode dissipation (kW)	Air flow		Water pressure drop	
	ft^3/min	m^3/min	inches	mm
15	485	13.7	1.65	4.2
20	710	20.1	2.85	7.25
25	1000	28.3	5.1	13.0
30	1320	37.4	8.9	22.6
35	1650	46.7	14.5	36.8

AUDIO FREQUENCY POWER AMPLIFIER OR MODULATOR (Class AB1) (See Note 2)

MAXIMUM RATINGS (Absolute values)

Anode voltage	20	kV max
Anode current	15	A max
Anode dissipation	35	kW max
Screen voltage	2.5	kV max
Screen dissipation	1750	W max
Grid dissipation	500	W max
Grid circuit resistance	0.1	MΩ max

TYPICAL OPERATING CONDITIONS (Class AB1, two valves)

Anode voltage	10	15	kV
Screen voltage	1.5	1.5	kV
Grid voltage	−290	−340	V
Peak a.f. voltage, grid to grid	270	310	V
Anode current (zero signal)	4.0	2.0	A
Anode current (maximum signal)	17.4	15.1	A
Screen current (zero signal)	0	0	A
Screen current (maximum signal)	0.77	0.62	A
Anode dissipation per tube (maximum signal)	33	30.5	kW
Effective load (anode to anode)	1.15	2.56	kΩ
Nominal driving power (maximum signal)	0	0	W
Output power (maximum signal)	110	165	kW

RADIO FREQUENCY LINEAR AMPLIFIER
(Class AB1) (See Note 2)

MAXIMUM RATINGS (Absolute values)

Anode voltage	20	kV max
Anode current	15	A max
Anode dissipation	35	kW max
Screen voltage	2.5	kV max
Screen dissipation	1750	W max
Grid dissipation	500	W max
Grid circuit resistance	0.1	MΩ max

TYPICAL OPERATING CONDITIONS
(Peak envelope or modulation crest conditions, below 30MHz)

Anode voltage	10	15	kV
Screen voltage	1.5	1.5	kV
Grid voltage (see note 3)	−290	−340	V
Peak r.f. grid drive voltage	270	310	V
Anode current (zero signal)	2.0	1.0	A
Anode current (maximum signal)	8.7	7.55	A
Screen current (maximum signal)	0.385	0.310	A
Anode dissipation	33	30.5	kW
Nominal driving power	0	0	W
Output power (see note 4)	55	82.5	kW

ANODE MODULATED R.F. POWER AMPLIFIER

(Class C Telephony, carrier conditions per valve for use with a maximum modulation factor of 1.0)

MAXIMUM RATINGS (Absolute values)

Anode voltage	17.5	kV max
Anode current	15	A max
Anode dissipation (see note 5)	23	kW max
Screen voltage	2.0	kV max
Screen dissipation	1750	W max
Grid dissipation	500	W max

TYPICAL OPERATING CONDITIONS (below 30MHz)

Anode voltage	7.5	10	15	kV
Screen voltage	750	750	750	V
Grid voltage	−460	−520	−540	V
Peak a.f. screen voltage (for 100% modulation)	640	675	630	V
Peak r.f. grid drive voltage	630	680	700	V
Anode current	7.0	6.6	6.45	A
Screen current	1.2	0.985	0.890	A
Grid current	0.375	0.370	0.355	A
Anode dissipation	10.5	11.0	14.5	kW
Nominal driving power	235	250	250	W
Output power	42	55	82.5	kW

R.F. POWER AMPLIFIER OR OSCILLATOR

(Class C Telegraphy, key down conditions, one valve)

MAXIMUM RATINGS (Absolute values)

Anode voltage	20	kV max
Anode current	15	A max
Anode dissipation	35	kW max
Screen voltage	2.5	kV max
Screen dissipation	1750	W max
Grid dissipation	500	W max

TYPICAL OPERATING CONDITIONS (below 30MHz)

Anode voltage	10	15	kV
Screen voltage	750	750	V
Grid voltage	−425	−480	V
Peak r.f. grid drive voltage	575	640	V
Anode current	6.70	6.45	A
Screen current	0.925	0.810	A
Grid current	0.320	0.355	A
Anode dissipation	12	14	kW
Nominal driving power	185	225	W
Output power	55	82.5	kW

NOTES

1. The valve must be operated at the stated filament voltage. Fluctuation in filament voltage must not exceed ±5%.
2. Grid current does not flow during any part of the drive cycle.
3. The grid voltage is adjusted to obtain the specified zero-signal anode current.
4. The peak envelope or r.f. output power at the crest of the modulation envelope.
5. This corresponds to an anode dissipation of 35kW at 100% sine wave modulation.

TYPICAL CONSTANT CURRENT CHARACTERISTICS

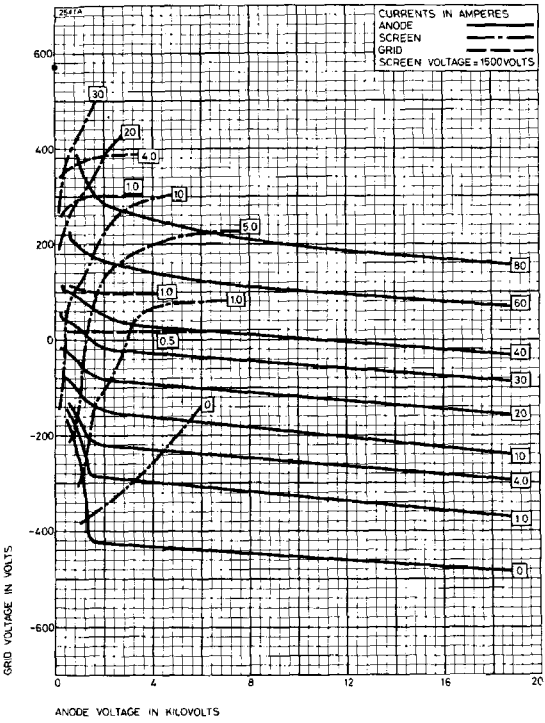

TYPICAL CONSTANT CURRENT CHARACTERISTICS

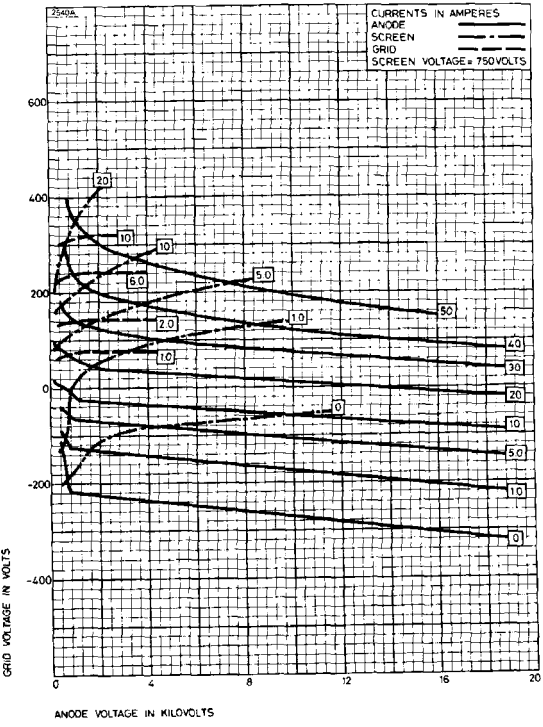

OUTLINE (All dimensions without limits are nominal)

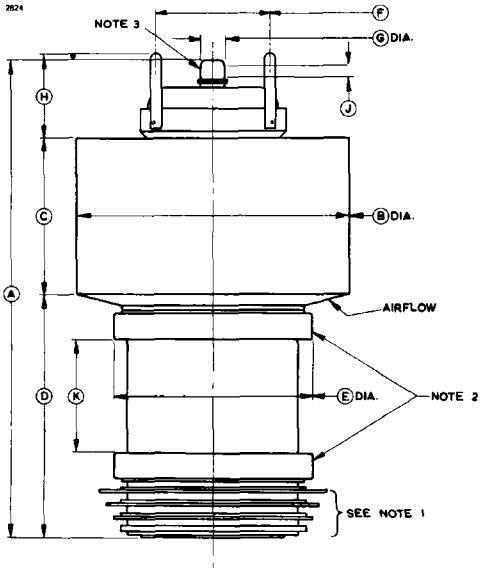

Ref	Inches	Millimetres	Ref	Inches	Millimetres
A	16.855 ± 0.125	428.1 ± 3.2	F	4.000	101.6
B	9.625 ± 0.125	244.5 ± 3.2	G	0.875 ± 0.015	22.23 ± 0.38
C	5.500 ± 0.125	139.7 ± 3.2	H	3.062	77.78
D	8.567 ± 0.125	217.6 ± 3.2	J	0.500 ± 0.015	12.70 ± 0.38
E	7.062 max	179.4 max	K	4.000 min	101.6 min

Millimetre dimensions have been derived from inches.

OUTLINE DETAIL

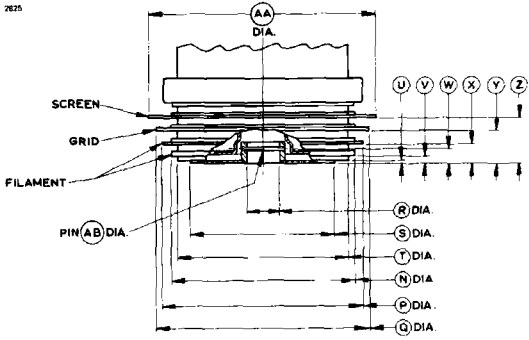

Ref	Inches	Millimetres	Ref	Inches	Millimetres
N	6.530 ± 0.030	165.9 ± 0.8	V	0.197 ± 0.031	5.00 ± 0.79
P	7.000 ± 0.020	177.8 ± 0.5	W	0.510 ± 0.020	12.95 ± 0.51
Q	7.500 ± 0.020	190.5 ± 0.5	X	0.715 ± 0.025	18.16 ± 0.64
R	1.260 ± 0.010	32.00 ± 0.25	Y	1.245 ± 0.025	31.62 ± 0.64
S	5.000 ± 0.020	127.0 ± 0.5	Z	1.775 ± 0.025	45.08 ± 0.64
T	6.000 ± 0.020	152.4 ± 0.5	AA	7.995 ± 0.020	203.1 ± 0.5
U	0.060 ± 0.015	1.52 ± 0.38	AB	0.135	3.43

Millimetre dimensions have been derived from inches.

Outline Notes

1. The eccentricity of the filament, grid and screen contact surfaces will not exceed 0.125 inch (3.18mm) with respect to dimension R with the tube mounted on the bottom ceramic.
2. *These surfaces must not be used for electrical contacts and must not be* clamped in any way.
3. This surface may be used for making electrical contact to the anode.

OUTLINE OF SOCKETS MA166 AND MA166B

(See pages 11 and 12 for plan views)

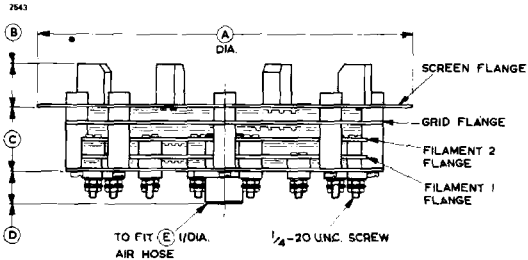

Ref	Inches	Millimetres
A	12.000 ± 0.015	304.8 ± 0.4
B	1.250 ± 0.156	31.75 ± 3.96
C	2.000 ± 0.020	50.80 ± 0.51
D	1.000 ± 0.020	25.40 ± 0.51
E	1.250	31.75
F	0.437	11.10
G	11.250	285.8
H	0.187	4.75
J	11.250	285.8
K	8.530	216.7
L	10.125 ± 0.031	257.2 ± 0.8
M	0.312	7.92
N	4.813	122.3

Millimetre dimensions have been derived from inches.

All dimensions without limits are nominal

Outline Detail of MA166 (See page 10 for dimensions)

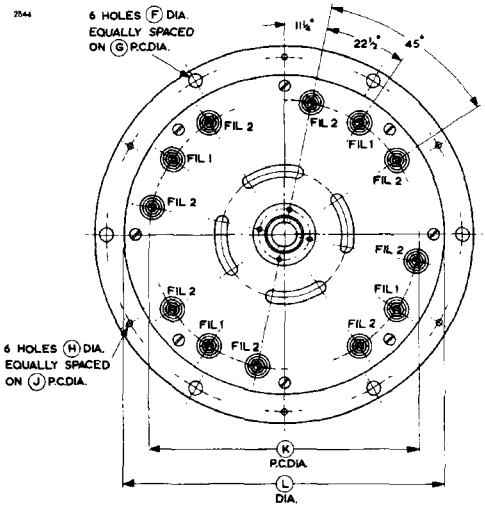
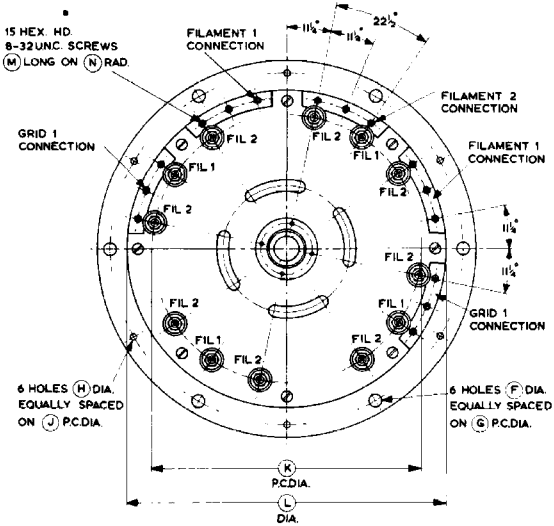
Outline Detail of MA166B (See page 10 for dimensions)