ADVANCE PRODUCT ANNOUNCEMENT

4CX25,000A VHF POWER TETRODE

The EIMAC 4CX25,000A is a ceramic/metal power tetrode intended for use in VHF-TV linear amplifier service. It features a type of internal mechanical structure which results in high rf operating efficiency. Low rf losses in this structure permit operation at full ratings to 230 MHz in TV linear amplifier service.

The anode is rated for 25 kW dissipation with forced-air cooling and uses a highly efficient cooler.

GENERAL CHARACTERISTICS [1]

ELECTRICAL

Filament: Thoriated Tungsten Mesh

Voltage	9.5 ± 0.5 V
Current, at 10.0 volts	150 A
Maximum Cold Start Inrush Current	300 A
Amplification Factor (Average) Grid to Screen	6.7
Direct Interelectrode Capacitances (cathode grounded) [2]	
Cin	171 pF
Cout	18.4 pF
Cgp	0.57 pF
Direct Interelectrode Capacitances (grids grounded) [2]	
Cin	79 pF
Cout	19 pF
Cpk	0.06 pF
Maximum Frequency for Full Ratings (CW)	230 MHz

1. Characteristics and operating values are based on performance tests. These figures may change without notice as the result of additional data or product refinement. Varian EIMAC should be consulted before using this information for final equipment design.
2. Capacitance values are for a cold tube as measured in a special shielded fixture in accordance with Electronic Industries Association Standard RS-191.

MECHANICAL

Maximum Overall Dimensions:	
Length	9.15 In; 23.24 cm
Diameter	8.85 In; 22.50 cm
Net Weight (approximate)	26.4 Lbs; 12.0 kg
Operating Position	Axis Vertical, Base Up or Down
Cooling	Forced Air
Operating Temperature, Absolute Maximum	
Ceramic/Metal Seals and Anode Core	250°C
Base	Special, Coaxial
Recommended Air-System Socket (for grid-driven dc or LF/HF applications)	EIMAC SK-320
Recommended Air Chimney (for use with SK-360 Socket)	EIMAC SK-326
Recommended Air-System Socket (for grid-driven VHF applications)	EIMAC SK-360
Available Screen Grid Bypass Capacitor Kit for SK-360 (8000 pF @ DCWV = 5000)	EIMAC SK-355
Available Anode Contact Connector	EIMAC ACC-3

TELEVISION LINEAR AMPLIFIER
CHANNELS 7-13 - Cathode Driven

ABSOLUTE MAXIMUM RATINGS

DC PLATE VOLTAGE	10.0	KILOVOLTS
DC SCREEN VOLTAGE	2.0	KILOVOLTS
DC GRID VOLTAGE	-1.0	KILOVOLT
DC PLATE CURRENT	8.0	AMPERES
PLATE DISSIPATION	25	KILOWATTS
SCREEN DISSIPATION	300	WATTS
GRID DISSIPATION	180	WATTS

* Approximate; will vary tube-to-tube.
\# Calculated; including circuit losses gain will be 1 to 2 dB lower.

TYPICAL OPERATION, Composite Signal Black Level unless otherwise stated

Plate Voltage	7800	Vdc
Screen Voltage	1400	Vdc
Grid Bias Voltage *	-107	Vdc
Zero-Signal Plate Current	1.6	Adc
Plate Current	5.3	Adc
Grid Current *	100	mAdc
Screen Current *	120	mAdc
Peak Cathode Voltage (peak sync)	173	v
Cathode Driving Power (peak sync) *	1000	w
Plate Output Power (peak sync)	34.7	kw
Plate Load Resistance	634	Ohms
Cathode Load Resistance	15	Ohms
Gain #	15.4	dB
Plate Dissipation	21	kW

395090(Effective March 1986)
VA4857

Printed In U.S.A.

VHF CLASS B CW RF AMPLIFIER
Cathode Driven

ABSOLUTE MAXIMUM RATINGS

DC PLATE VOLTAGE . . .	10.0	KILOVOLTS
DC SCREEN VOLTAGE . .	2.0	KILOVOLTS
DC GRID VOLTAGE . . .	-1.0	KILOVOLT
DC PLATE CURRENT . . .	8.0	AMPERES
PLATE DISSIPATION . .	25	KILOWATTS
SCREEN DISSIPATION . .	300	WATTS
GRID DISSIPATION . . .	180	WATTS

* Approximate; will vary tube-to-tube.
\# Adjust for zero-signal plate current.

TYPICAL OPERATION:

Plate Voltage	6400	7000	Vdc
Screen Voltage	1200	1200	Vdc
Grid Bias Voltage #	-95	-110	Vdc
Zero-Signal Plate Current	1.0	0.5	Adc
Plate Current	4.05	3.4	Adc
Grid Current *	77	40	mAdc
Screen Current *	200	200	mAdc
Plate Output Power	16.5	16.5	kW
Plate Dissipation	9.8	7.8	kW
Plate Load Resistance	820	1090	Ohms
Cathode Load Resistance	18	22	Ohms
Cathode Drive Power *	420	380	W

TYPICAL OPERATION values are obtained by measurement or by calculation from published characteristic curves. To obtain the specified plate current at the specified bias, screen, and plate voltages, adjustment of the rf grid voltage is assumed. If this procedure is followed, there will be little variation in ouput power when the tube is replaced, even though there may be some variation in grid and screen currents. The grid and screen currents which occur when the desired plate current is obtained are incidental and vary from tube to tube. These current variations cause no performance degradation providing the circuit maintains the correct voltage in the presence of the current variations.

APPLICATION

MECHANICAL

STORAGE - If a tube is to be stored as a spare it should be kept in its original shipping carton, with the original packing material, to minimize the possibility of handling damage.

Before storage a new tube should be operated in the equipment for 100 to 200 hours to establish it has not been damaged and operates properly (See FILAMENT OPERATION for recommendations on initial value of filament voltage during this operation period). If the tube is still in storage 6 months later it again should be operated in the equipment for 100 to 200 hours to make sure there has been no degradation. If operation is satisfactory the tube can again be stored with great assurance of being a known-good spare.

MOUNTING - The 4CX25,000A must be operated with its axis vertical. The base of the tube may be up or down at the convenience of the designer.

SOCKET & CHIMNEY - The EIMAC air-system socket SK-320 and air chimney SK-326 are designed for use with the 4CX25,000A in dc or LF/HF applications. For VHF applications the SK-360 air-system socket is recommended. The use of the recommended air flow through an air-system socket will provide effective forced-air cooling of the base, with air then guided through the anode cooling fins by the air chimney.

COOLING - The maximum temperature rating for the external surfaces of the tube is 250 Deg.C, and sufficient forced-air cooling must be used in all applications to keep the temperature of the anode (at the base of the cooling fins) and the temperature of the ceramic/metal seals comfortably below this rated maximum.

It is considered good engineering practice to design for a maximum anode core temperature of 225°C and temperature-sensitive paints are available for checking base and seal temperatures before any design is finalized. EIMAC Application Bulletin #20 titled "TEMPERATURE MEASUREMENTS WITH EIMAC TUBES" is available on request.

It is also good practice to allow for variables such as dirty air filters, rf seal heating, and the fact that the anode cooling fins may not be clean if the tube has been in service for some length of time. Special attention is required in cooling the center of the stem (base), by means of special directors or some other provision. An air interlock system should be incorporated in the design to automatically remove all voltages from the tube in case of even partial failure of the tube cooling air.

It should be noted the contact fingers used in the contact collet assemblies (inner and outer filament, control grid and screen grid) are made of beryllium copper. If operated above 150°C for any appreciable length of time this material will loose its temper (or springy characteristic) and then will no longer make good contact to the base contact areas of the tube. This can lead to arcing which can melt metal in a contact area (primarily the inner or outer filament contacts) and the tube's vacuum integrity is then destroyed.

If all cooling air is not passed around the base of the tube and through the socket, then arrangements must be made to assure adequate cooling of the tube base and the socket contacts. Movement of cooling air around the base of the tube accomplishes a double purpose in keeping the tube base and the socket contact fingers at a safe operating temperature.

Minimum air flow requirements for a maximum anode temperature of 225°C for various altitudes and dissipation levels are listed. The pressure drop values shown are approximate and are for the tube anode cooler only. Pressure drop in a typical installation will be higher because of system loss.

Inlet Air Temperature = 25°C

Sea Level	Plate Diss. kW	Flow Rate CFM	Press. Drop In.Water
	10	150	0.3
	15	320	0.9
	20	550	2.2
	25	840	4.6

5000 Feet	Plate Diss. kW	Flow Rate CFM	Press. Drop In.Water
	10	190	0.3
	15	390	1.0
	20	660	2.5
	25	1010	5.2

10,000 Feet	Plate Diss. kW	Flow Rate CFM	Press. Drop In.Water
	10	230	0.4
	15	470	1.1
	20	800	2.8
	25	1230	5.9

Inlet Air Temperature = 35°C

Sea Level	Plate Diss. kW	Flow Rate CFM	Press. Drop In.Water
	10	180	0.4
	15	370	1.1
	20	630	2.7
	25	960	5.6

5000 Feet	Plate Diss. kW	Flow Rate CFM	Press. Drop In.Water
	10	210	0.4
	15	440	1.2
	20	590	2.0
	25	1170	6.4

10,000 Feet	Plate Diss. kW	Flow Rate CFM	Press. Drop In.Water
	10	260	0.4
	15	540	1.4
	20	920	3.4
	25	1410	7.3

Inlet Air Temperature = 50°C

Sea Level	Plate Diss. kW	Flow Rate CFM	Press. Drop In.Water
	10	220	0.5
	15	460	1.5
	20	780	3.6
	25	1200	7.7

5000 Feet	Plate Diss. kW	Flow Rate CFM	Press. Drop In.Water
	10	270	0.5
	15	550	1.6
	20	950	4.1
	25	1450	8.9

10,000 Feet	Plate Diss. kW	Flow Rate CFM	Press. Drop In.Water
	10	320	0.6
	15	670	1.8
	20	1140	4.7
	25	1760	10.3

When long life and consistent performance are factors cooling in excess of minimum requirements is normally beneficial.

Air flow must be applied before or simultaneously with the application of power, including the tube filament, and should normally be maintained for a short period of time after all power is removed to allow for tube cooldown.

ELECTRICAL

HIGH VOLTAGE - Normal operating voltages used with this tube are deadly, and operating precautions must be followed. Design all equipment so that no one can come in contact with high voltages. All equipment must include safety enclosures for high-voltage circuits and terminals, with interlock switches to open primary circuits of the power supply and to discharge high-voltage capacitors whenever access doors are opened. Interlock switches must not be bypassed or "cheated" to allow operation with access doors open. Always remember that HIGH VOLTAGE CAN KILL.

FILAMENT OPERATION - This tube is designed for commercial service, with no more than one normal off/on filament cycle per day. If additional cycling is anticipated it is recommended the user contact Application Engineering at Varian EIMAC for additional information.

Filament inrush current should be limited to twice normal current. A suitable step-start procedure can accomplish this, with full operating temperature reached in as little as four seconds.

With a new tube, or one which has been in storage for some period of time, operation with filament voltage only applied for a period of 30 to 60 minutes is recommended before full operation begins. This allows the active getter material mounted within the filament structure to absorb any residual gas molecules which have accumulated during storage. Once normal operation has been established a minimum filament warmup time of four seconds is normally sufficient. (See current inrush limitation and step-start comment above.)

At rated (nominal) filament voltage the peak emission capability of the tube is many times that needed for communication service. A reduction in filament voltage will lower the filament temperature, which will substantially increase life expectancy. The correct value of filament voltage should be determined for the particular application. It is recommended the tube be operated at full nominal voltage for an initial stabilization period of 100 to 200 hours before any action is taken to operate at reduced voltage. The voltage should gradually be reduced until there is a slight degradation in performance (such as power output or distortion). The voltage should then be increased a few tenths of a volt above the value where performance degradation was noted for operation. The operating point should be rechecked after 24 hours.

Filament voltage should be closely regulated when voltage is to be reduced below nominal in this manner, to avoid any adverse influence by normal line voltage variations.

Filament voltage should be measured at the tube base or socket, using an accurate rms-responding meter. Periodically throughout the life of the tube the procedure outlined above for reduction of voltage should be repeated, with voltage reset as required, to assure best tube life.

EIMAC Application Bulletin #18 titled "EXTENDING TRANSMITTER TUBE LIFE" contains valuable information and is available on request.

DISSIPATION RATINGS - Maximum dissipation ratings for the 4CX25,000A must be respected to avoid damage to the tube. An exception is plate dissipation which may be permitted to rise above the rated maximum during brief periods (10 seconds maximum) such as may occur during tuning.

GRID OPERATION - The maximum control grid dissipation is 180 watts, determined approximately by the product of the dc grid current and the peak positive grid voltage. A protective spark-gap device should be connected between the control grid and the cathode to guard against excessive voltage.

SCREEN OPERATION - The maximum screen grid dissipation is 300 watts. With no ac applied to the screen grid, dissipation is simply the product of dc screen voltage and the dc screen current. Plate voltage, plate loading, or bias voltage must never be removed while filament and screen voltages are present, since screen dissipation ratings will be exceeded. Energy limiting circuitry (which will activate if there is a fault condition) and spark gap over-voltage protection are recommended as good engineering practice.

The tube may exhibit reversed (negative) screen current under some operating conditions. Screen supply voltage must be maintained constant for any values of negative and positive screen current which may be encountered. Dangerously high plate current may flow if the screen power supply exhibits a rising voltage characteristic with negative screen current. Stabilization may be accomplished with a bleeder resistor connected from screen to cathode, to assure that net screen supply current is always positive. This is essential if a series electronic regulator is employed.

FAULT PROTECTION - In addition to the normal plate over-current interlock, screen current interlock, and coolant interlock, the tube must be protected from internal damage caused by an internal plate arc which may occur at high plate voltage. A protective resistance should always be connected in series with the tube anode (in the B+ line, to absorb power supply stored energy if an internal arc should occur. If power supply stored energy is high an electronic crowbar, which will discharge power supply capacitors in a few microseconds after the start of an arc, is recommended. The protection criteria for each electrode supply is to short each electrode to ground, one at a time, through a vacuum relay switch and a 6-inch section of #30 AWG copper wire. The wire will remain intact if protection is adequate.

EIMAC's Application Bulletin #17 FAULT PROTECTION contains considerable detail, and is available on request.

RADIO-FREQUENCY RADIATION - Avoid exposure to strong rf fields even at relatively low frequency. Absorption of rf energy by human tissue is dependent on frequency. Under 300 MHz most of the energy will pass completely through the human body with little attenuation or heating affect. Public health agencies are concerned with the hazard even at these frequencies. OSHA (Occupational Safety and Health Administration) recommends that prolonged exposure to rf radiation should be limited to 10 milliwatts per square centimeter.

INTERELECTRODE CAPACITANCE - The actual internal interelectrode capacitance of a tube is influenced by many variables in most applications, such as stray capacitance to the chassis, capacitance added by the socket used, stray capacitance between tube terminals, and wiring effects. To control the actual capacitance values within the tube, as the key component involved, the industry and Military Services use a standard test procedure as described in Electronic Industries Association Standard RS-191. This requires the use of a specially constructed test fixture which shields all external tube leads or contacts from each other and eliminates any capacitance reading to "ground". The test is performed on a cold tube. Other factors being equal, controlling internal tube capacitance in this way normally assures good interchangeability of tubes over a period of time. The capacitance values shown in the technical data are taken in accordance with Standard RS-191. The equipment designer is therefore cautioned to make allowance for the actual capacitance values which will exist in the appliction. Measurements should be taken with the mounting which represents approximate final layout if capacitance values are highly significant in the design.

SPECIAL APPLICATIONS - When it is desired to operate this tube under conditions widely different from those listed here, write to Varian EIMAC; attn: Product Manager; 301 Industrial Way; San Carlos, CA 94070 U.S.A.

OPERATING HAZARDS

PROPER USE AND SAFE OPERATING PRACTICES WITH RESPECT TO POWER TUBES ARE THE RESPONSIBILITY OF EQUIPMENT MANUFACTURERS AND USERS OF SUCH TUBES. ALL PERSONS WHO WORK WITH OR ARE EXPOSED TO POWER TUBES OR EQUIPMENT WHICH UTILIZES SUCH TUBES MUST TAKE PRECAUTIONS TO PROTECT THEMSELVES AGAINST POSSIBLE SERIOUS BODILY INJURY. DO NOT BE CARELESS AROUND SUCH PRODUCTS.

The operation of this tube may involve the following hazards, any one of which, in the absence of safe operating practices and precautions, could result in serious harm to personnel:

a. HIGH VOLTAGE - Normal operating voltages can be deadly. Remember that HIGH VOLTAGE CAN KILL.

b. LOW-VOLTAGE HIGH-CURRENT CIRCUITS - personal jewelry, such as rings, should not be worn when working with filament contacts or connectors as a short circuit can produce very high current and melting, resulting in severe burns.

c. RF RADIATION - Exposure to strong rf fields should be avoided, even at relatively low frequencies. The dangers of rf radiation are more severe at UHF and microwave frequencies and can cause serious bodily and eye injuries. CARDIAC PACEMAKERS MAY BE EFFECTED.

d. HOT SURFACES - Surfaces of tubes can reach temperatures of several hundred °C and cause serious burns if touched for several minutes after all power is removed.

Please review the detailed operating hazards sheet enclosed with each tube, or request a copy from: Varian EIMAC, Power Grid Application Engineering, 301 Industrial Way, San Carlos CA 94070.

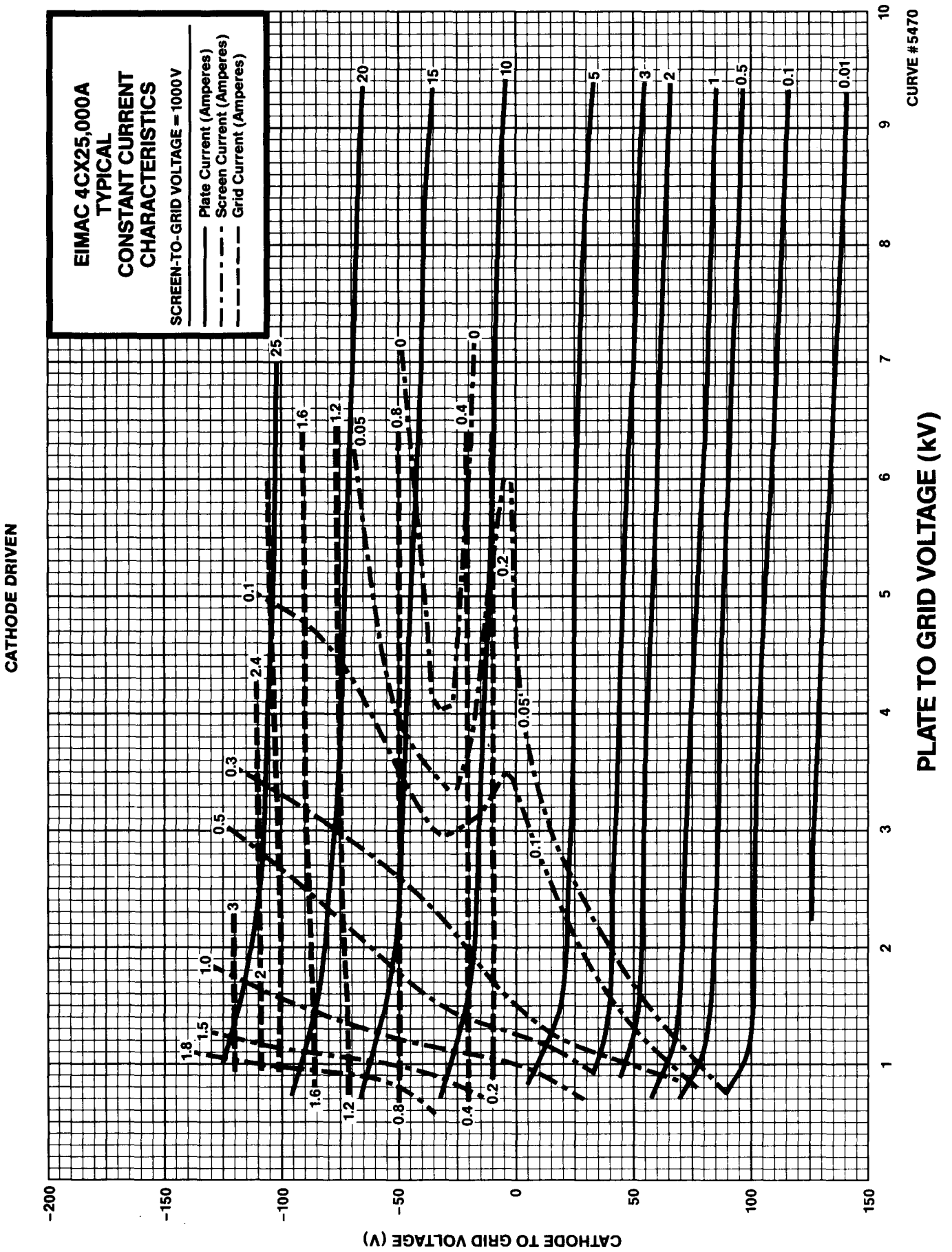
EIMAC 4CX25,000A
TYPICAL
CONSTANT CURRENT
CHARACTERISTICS
SCREEN-TO-GRID VOLTAGE = 1000 V
Plate Current (Amperes)
Screen Current (Amperes)
Grid Current (Amperes)
CATHODE DRIVEN
CURVE #5470
PLATE TO GRID VOLTAGE (kV)
CATHODE TO GRID VOLTAGE (V)
-200
-150
-100
-50
0
50
100
150
1
2
3
4
5
6
7
8
9
10
20
15
10
5
3
2
1
0.5
0.1
0.01
25
1.6
1.2
0.05
0.8
0
0.4
0.2
0.1
0.05
2.4
0.3
0.5
1.0
1.5
1.8
3
2
1.6
1.2
0.8
0.4
0.2

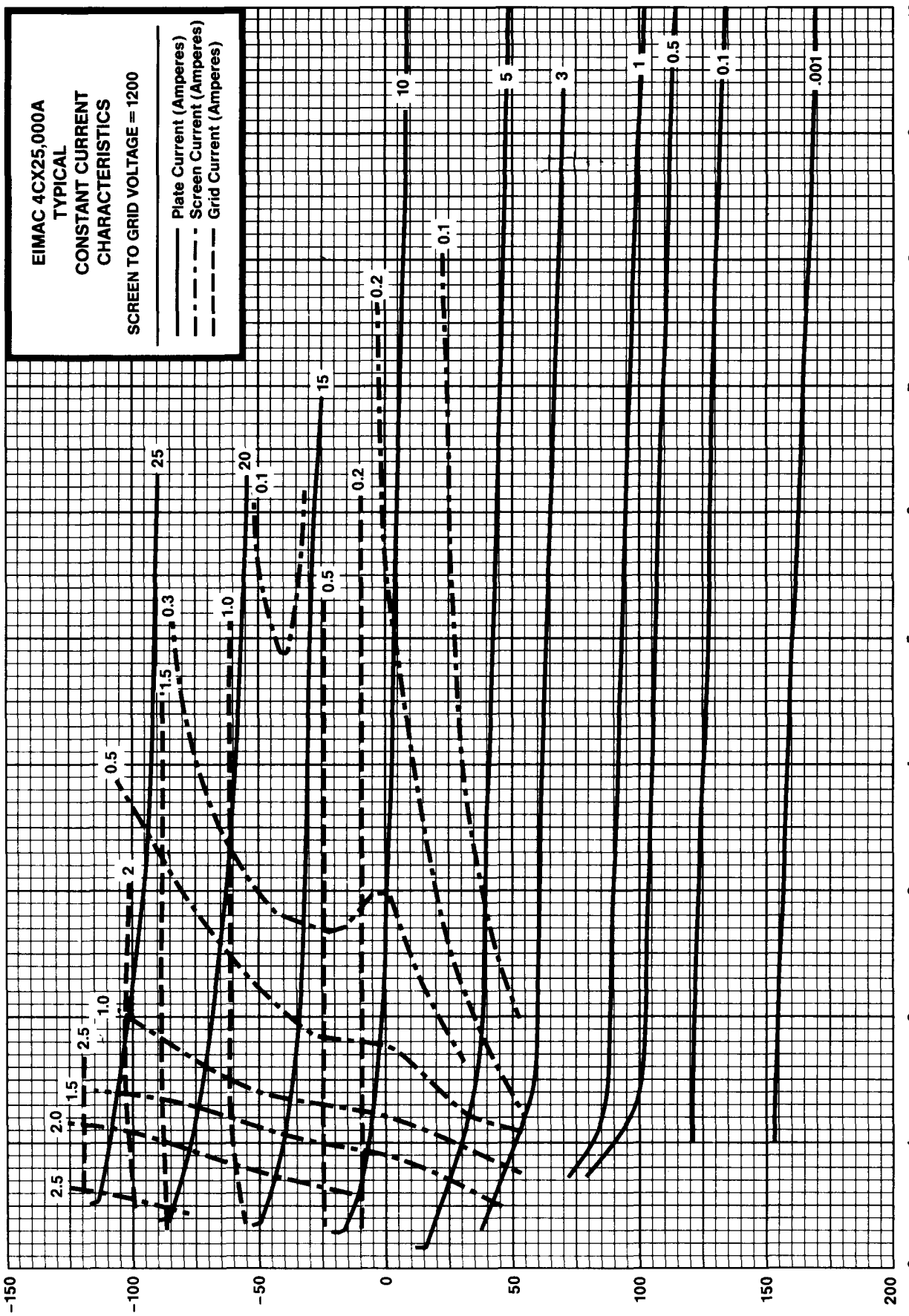
EIMAC 4CX25,000A
TYPICAL
CONSTANT CURRENT
CHARACTERISTICS
SCREEN TO GRID VOLTAGE = 1200
Plate Current (Amperes)
Screen Current (Amperes)
Grid Current (Amperes)
CATHODE DRIVEN
CATHODE TO GRID VOLTAGE (V)
PLATE TO GRID VOLTAGE (kV)
CURVE #5288
-150
-100
-50
0
50
100
150
200
0
1
2
3
4
5
6
7
8
9
10
25
20
15
10
5
3
1
0.5
0.1
.001
2.5
2.0
1.5
1.0
0.5
0.3
0.2
0.1

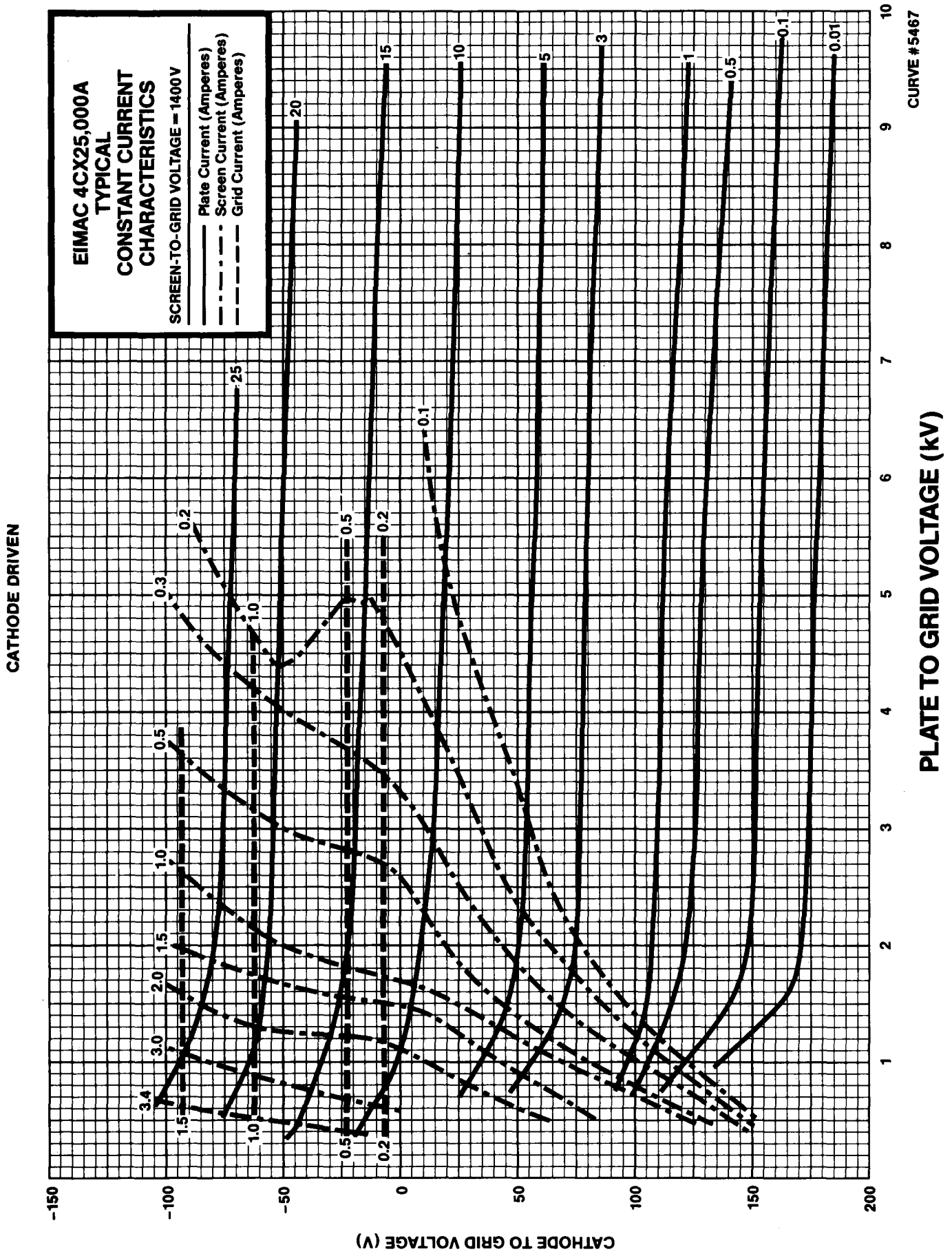
EIMAC 4CX25,000A
TYPICAL
CONSTANT CURRENT
CHARACTERISTICS
SCREEN-TO-GRID VOLTAGE = 1400 V
Plate Current (Amperes)
Screen Current (Amperes)
Grid Current (Amperes)
CATHODE DRIVEN
CURVE #5467
PLATE TO GRID VOLTAGE (kV)
CATHODE TO GRID VOLTAGE (V)
-150
-100
-50
0
50
100
150
200
1
2
3
4
5
6
7
8
9
10
20
15
10
5
3
1
0.5
0.1
0.01
25
0.1
0.2
0.3
0.5
1.0
1.5
2.0
3.0
3.4
0.5
0.2
0.5
1.0
1.5

DIMENSIONAL DATA						
	INCHES			MILLIMETERS		
DIM	MIN	MAX	REF	MIN	MAX	REF
A	8.730	8.860		221.74	225.04	
B	.855	.895		21.72	22.73	
C	4.406	4.468		111.91	113.49	
D	.600	.760		15.24	19.30	
E	1.896	1.936		48.16	49.17	
F	3.133	3.173		79.58	80.59	
G	3.792	3.832		96.32	97.33	
H	3.980	4.020		101.09	102.11	
J	.188			4.78		
K	.188			4.78		
L	.188			4.78		
M	3.160	3.220		80.26	81.79	
N	.219			5.56		
P	3.300	3.380		83.82	85.85	
R	2.690	2.810		68.32	71.37	
S	9.025	9.150		229.24	232.41	
T	.500			12.70		
U	1.766	1.828		44.86	46.43	

NOTES:
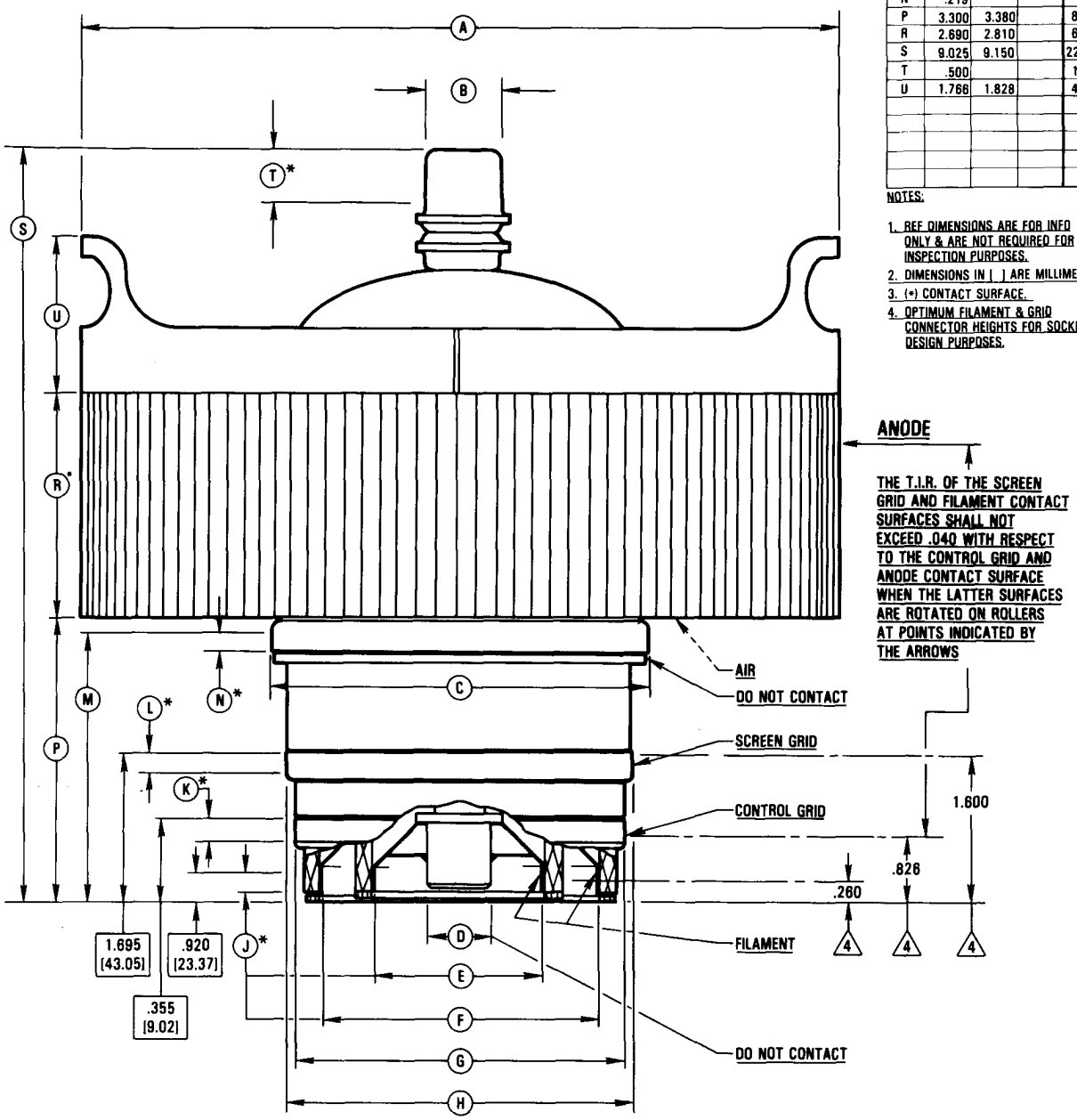
1. REF DIMENSIONS ARE FOR INFO ONLY & ARE NOT REQUIRED FOR INSPECTION PURPOSES.
2. DIMENSIONS IN [ ] ARE MILLIMETERS.
3. (*) CONTACT SURFACE.
4. OPTIMUM FILAMENT & GRID CONNECTOR HEIGHTS FOR SOCKET DESIGN PURPOSES.