4CX10,000J

TECHNICAL DATA

RADIAL-BEAM
POWER TETRODE

The EIMAC 4CX10,000J is a compact, high-power, ceramic/metal, forced-air cooled tetrode with a rated maximum plate dissipation of 12,000 watts. It incorporates rugged internal construction features, including a mesh filament/cathode.

The 4CX10,000J is specifically designed for exceptionally low intermodulation distortion in radio-frequency linear amplifier service.

GENERAL CHARACTERISTICS[1]

ELECTRICAL

Filament: Thoriated Tungsten
- Voltage . . . . . 7.5 ± 0.37 V
- Current, at 7.5 volts . . . . . 103 A

Amplification Factor (Average):
- Grid to Screen 4.5

Direct Interelectrode Capacitance (grounded filament)[2]
- Cin . . . . . 120 pF
- Cout . . . . . 20.5 pF
- Cgp . . . . . 0.7 pF

Direct Interelectrode Capacitance (grounded grid) [2]
- Cin . . . . . 56 pF
- Cout . . . . . 21.5 pF
- Cpk . . . . . 0.10 pF

Frequency of Maximum Rating:
- CW . . . . . 100 MHz

1. Characteristics and operating values are based upon performance tests. These figures may change without notice as the result of additional data or product refinement. EIMAC Division of Varian should be consulted before using this information for final equipment design.
2. Capacitance values are for a cold tube as measured in a special shielded fixture in accordance with Electronic Industries Association Standard RS-191.

MECHANICAL

Maximum Overall Dimensions:
- Length . . . . . 9.125 in: 231.77 mm
- Diameter . . . . . 7.050 in; 179.07 mm

Net Weight . . . . . 12.2 lb; 5.55 kg

Operating Position . . . . . Axis vertical, base up or down

(Effective 2-1-72) © by Varian

Printed in U.S.A.

Maximum Operating Temperature:	
Ceramic/Metal Seals or Anode Core	250°C
Cooling	Forced Air
Base	Special concentric
Recommended Air System Socket	SK-300A
Recommended (Air) Chimney	SK-1306

RADIO FREQUENCY LINEAR AMPLIFIER
GRID DRIVEN
Class AB1

ABSOLUTE MAXIMUM RATINGS:

DC PLATE VOLTAGE	7500	VOLTS
DC SCREEN VOLTAGE	1600	VOLTS
DC PLATE CURRENT	4.0	AMPERES
PLATE DISSIPATION	12,000	WATTS
SCREEN DISSIPATION	250	WATTS
GRID DISSIPATION	75	WATTS

1. Adjust to specified zero-signal dc plate current.
2. Approximate value.
3. Useful power is that delivered to the load.
4. Referenced against one tone of a two equal-tone signal.

TYPICAL OPERATION
Class AB_1, Grid Driven, Peak Envelope or Modulation Crest Conditions

Plate Voltage	7500	Vdc
Screen Voltage	1600	Vdc
Grid Voltage [1]	-400	Vdc
Zero-Signal Plate Current	300	mAdc
Single-Tone Plate Current	2.2	Adc
Single-Tone Screen Current [2]	30	mAdc
Peak rf Grid Voltage [2]	400	v
Single-Tone Plate Dissipation	8500	W
Useful Power Output (PEP) [3]	10	kW
Load Impedance	1650	Ω
Intermodulation Distortion Products [4]:		
3rd Order	-35	dB
5th Order	-40	dB

NOTE: TYPICAL OPERATION data are obtained from direct measurement or by calculation from published characteristic curves. Adjustment of the rf grid voltage to obtain the specified plate current at the specified bias, screen and plate voltages is assumed. If this procedure is followed, there will be little variation in output power when the tube is changed, even though there may be some variation in screen current. The screen current which results when the desired plate current is obtained is incidental and varies from tube to tube. This current variation causes no difficulty so long as the circuit maintains the correct voltage in the presence of the variations in current.

RANGE VALUES FOR EQUIPMENT DESIGN

	Min.	Max.	
Filament: Current at 7.5 volts	98	108	A
Interelectrode Capacitances[1](grounded filament connection)			
Cin	113	127	pF
Cout	18	23	pF
Cgp	---	1.0	pF
Interelectrode Capacitances[1](grounded grid connection)			
Cin	51	61	pF
Cout	19	24	pF
Cpk	---	0.16	pF

1. Capacitance values are for a cold tube as measured in a special shielded fixture in accordance with Electronic Industries Association Standard RS-191.

APPLICATION

MECHANICAL

MOUNTING - The 4CX10,000J must be operated with its axis vertical. The base of the tube may be down or up at the convenience of the circuit designer.

SOCKET - The EIMAC SK-300A Air-System Socket is designed especially for the concentric base terminals of the 4CX10,000J. The use of recommended air-flow rates through this socket pro-

vides effective forced-air cooling of the tube. Air forced into the bottom of the socket passes over the tube terminals and through an Air Chimney, the SK-1316, into the anode cooling fins.

COOLING - The maximum temperature rating for the external surfaces of the 4CX10,000J is 250°C. Sufficient forced-air circulation must be provided to keep the temperature of the anode at the base of the cooling fins and the temperature of the ceramic/metal seals below 250°C. Air-flow requirements to maintain seal temperatures at 200°C in 50°C ambient air are tabulated below (for operation below 30 megahertz). The pressure drop values shown are for the Tube/Socket/Chimney combination.

	SEA LEVEL		10,000 FEET	
Plate Dissipation * (Watts)	Air Flow (CFM)	Pressure Drop (In. of water)	Air Flow (CFM)	Pressure Drop (In. of water)
4000	110	0.4	160	0.6
6000	200	0.8	290	1.2
8000	315	1.7	460	2.5
10000	445	2.8	645	4.1
12000	600	4.4	870	6.4

* Since the power dissipated by the filament represents about 770 watts and since grid-plus screen dissipation can, under some conditions, represent another 200 to 300 watts, allowance has been made in preparing this tabulation for an additional 1200 watts dissipation.

At higher altitudes, higher frequencies, or higher ambient temperatures the flow rate must be increased to obtain equivalent cooling. The flow rate and corresponding pressure differential must be determined individually in such cases, using maximum rated temperatures as the criteria for satisfactory cooling.

IMPACT AND VIBRATION - The 4CX10,000J is designed to operate under shock and vibration conditions which might disable a less rugged tube. Production tubes are subjected to testing to insure ability to withstand 15 G impact at 11 milliseconds duration and 2 G vibratory acceleration over the range of 5 to 55 Hz.

ELECTRICAL

FILAMENT VOLTAGE - The rated filament voltage for the 4CX10,000J is 7.5 volts. Filament voltage, as measured at the socket, should be maintained at this value to obtain maximum tube life. In no case should it be allowed to deviate by more than 5 percent from the rated value.

GRID DISSIPATION - The 4CX10,000J control grid has a maximum dissipation rating of 75 watts. Precautions should be observed to avoid exceeding this rating. Grid dissipation is approximately the product of dc grid current and peak positive grid voltage. The grid bias and driving power should be kept near the values shown in the "Typical Operation" sections of the data sheet whenever possible.

SCREEN DISSIPATION - The power dissipated by the screen of the 4CX10,000J must not exceed 250 watts.

Screen dissipation, in cases where there is no ac applied to the screen, is the simple product of the screen voltage and the screen current.

Screen dissipation is likely to rise to excessive values when the plate voltage, bias voltage, or plate load are removed with filament and screen voltages applied. Suitable protective means must be provided to limit the screen dissipation to 250 watts in the event of circuit failure.

PLATE DISSIPATION - The plate-dissipation rating for the 4CX10,000J is 12,000 watts. Plate dissipation may be permitted to rise above the maximum rating during brief periods, such as may occur during tuning.

HIGH VOLTAGE - The 4CX10,000J operates at voltages which can be deadly, and the equipment must be designed properly and operating precautions must be followed. Equipment must be designed so that no one can come in contact with high voltages. All equipment must include safety enclosures for high-voltage circuits and terminals, with interlock switches to open the primary circuits of the power supplies and to discharge high voltage condensers whenever access doors are opened. Interlock switches must not be bypassed or "cheated" to allow operation with access doors open. Always remember that HIGH VOLTAGE CAN KILL.

INTERELECTRODE CAPACITANCE - The actual internal interelectrode capacitance of a tube is influenced by many variables in most applications, such as stray capacitance to the chassis, capacitance added by the socket used, stray capacitance between tube terminals, and wiring effects. To control the actual capacitance values within the tube, as the key component involved, the industry and the Military Services use a standard test procedure as described in Electronic Industries Association Standard

RS-191. This requires the use of specially constructed test fixtures which effectively shield all external tube leads from each other and eliminates any capacitance reading to "ground". The test is performed on a cold tube. Other factors being equal, controlling internal tube capacitance in this way normally assures good interchangeability of tubes over a period of time, even when the tube may be made by different manufacturers. The capacitance values shown in the manufacturer's technical data, or test specifications, normally are taken in accordance with Standard RS-191.

The equipment designer is therefore cautioned to make allowance for the actual capacitance values which will exist in any normal application. Measurements should be taken with the socket and mounting which represent approximate final layout if capacitance values are highly significant in the design.

SPECIAL APPLICATIONS - If it is desired to operate this tube under conditions widely different from those given here, write to Power Grid Tube Division, EIMAC Division of Varian, 301 Industrial Way, San Carlos, California 94070, for information and recommendations.

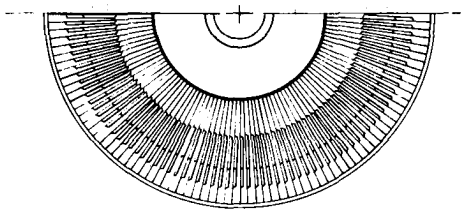

DIMENSIONAL DATA						
DIM.	INCHES			MILLIMETERS		
	MIN.	MAX.	REF.	MIN.	MAX.	REF.
A	6.928	7.050	- -	175.97	179.07	- -
B	0.855	0.895	- -	21.72	22.73	- -
C	0.720	0.760	- -	18.29	19.30	- -
D	1.896	1.936	- -	48.16	49.17	- -
E	3.133	3.173	- -	79.58	80.59	- -
F	3.792	3.832	- -	96.32	97.33	- -
G	3.980	4.020	- -	101.09	102.11	- -
H	0.188	- -	- -	4.77	- -	- -
J	0.188	- -	- -	4.77	- -	- -
K	0.188	- -	- -	4.77	- -	- -
L	1.764	1.826	- -	44.80	46.38	- -
M	4.186	4.568	- -	106.32	116.03	- -
N	2.412	2.788	- -	61.26	70.81	- -
P	8.812	9.062	- -	223.82	230.17	- -
R	0.986	1.050	- -	25.04	26.67	- -
S	3.412	3.788	- -	86.66	96.21	- -
T	0.375	- -	- -	9.52	- -	- -

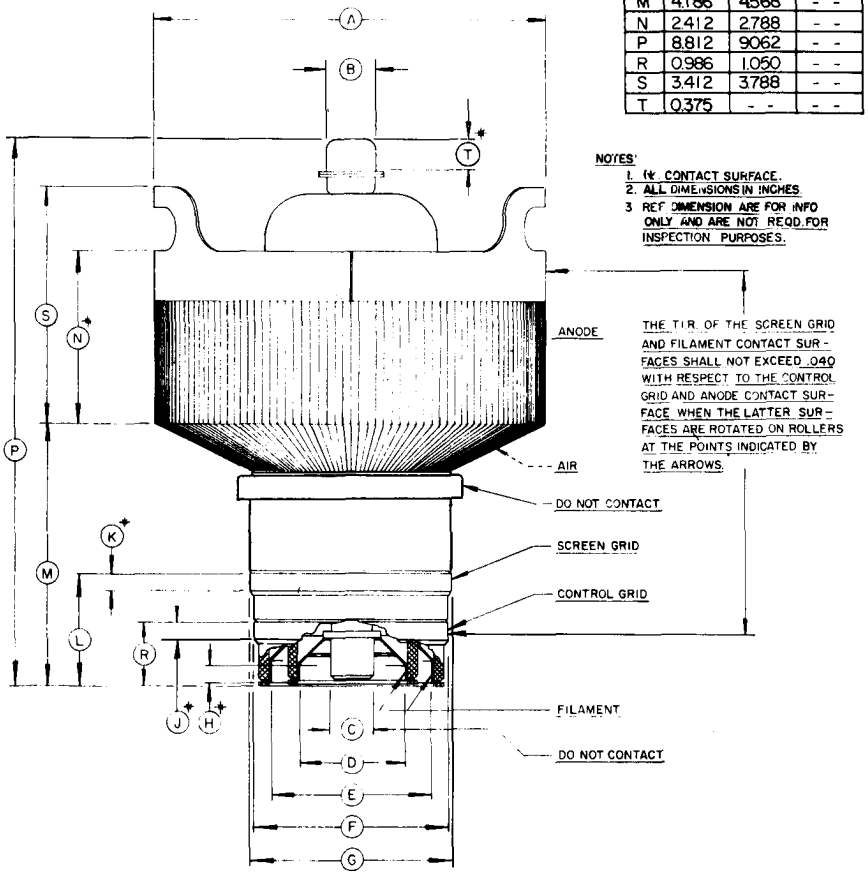

NOTES:
1. ✱ CONTACT SURFACE.
2. ALL DIMENSIONS IN INCHES.
3. REF DIMENSION ARE FOR INFO ONLY AND ARE NOT REQD. FOR INSPECTION PURPOSES.

THE T.I.R. OF THE SCREEN GRID AND FILAMENT CONTACT SURFACES SHALL NOT EXCEED .040 WITH RESPECT TO THE CONTROL GRID AND ANODE CONTACT SURFACE WHEN THE LATTER SURFACES ARE ROTATED ON ROLLERS AT THE POINTS INDICATED BY THE ARROWS.

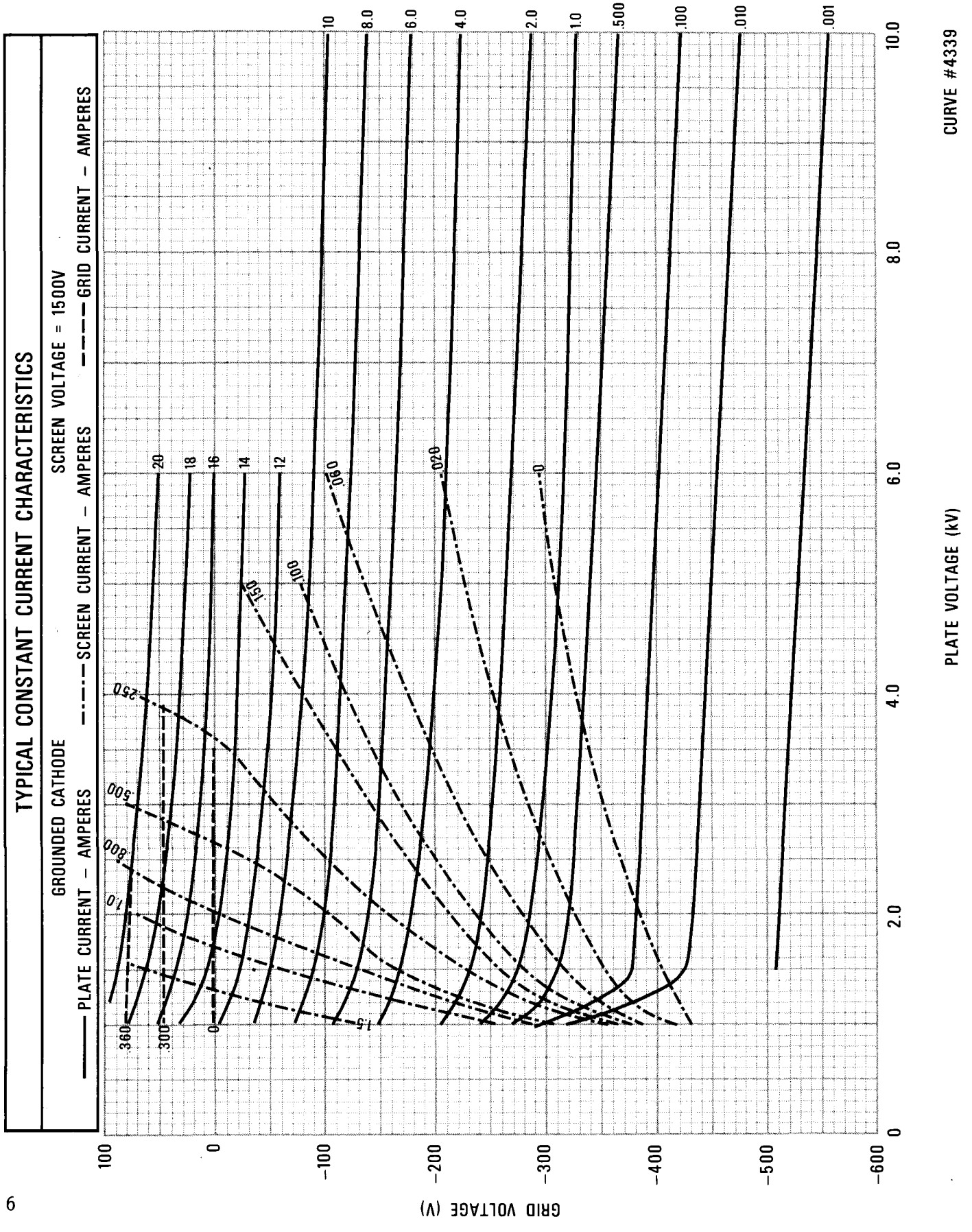
TYPICAL CONSTANT CURRENT CHARACTERISTICS
GROUNDED CATHODE
SCREEN VOLTAGE = 1500V
PLATE CURRENT – AMPERES
SCREEN CURRENT – AMPERES
GRID CURRENT – AMPERES
GRID VOLTAGE (V)
PLATE VOLTAGE (kV)
CURVE #4339