EITEL-McCULLOUGH, INC.
SAN CARLOS · CALIFORNIA

4CX10000D

RADIAL-BEAM POWER TETRODE

The Eimac 4CX10,000D is a metal-ceramic tetrode which is identical electrically to the 4CX5000A except for its rated plate dissipation of ten kilowatts. This increased dissipation capability, resulting from a larger cooler, is most useful in linear applications where plate dissipation is generally the limiting factor. Accordingly, more output power can be obtained in r-f or a-f linear service and "Typical" operating conditions have been modified to reflect this change in tube capability.

The improved cooler also allows the 4CX10,000D to be used in place of the 4CX5000A with less cooling for any given plate dissipation or results in cooler operation at any given air-flow rate.

The 4CX10,000D is useful as an oscillator, amplifier, or modulator at frequencies up to 110 megacycles and is particularly suited for use as a linear r-f amplifier or class-AB_1 audio amplifier.

A pair of these tubes, operating class-AB_1 will deliver more than 30 kilowatts of audio-frequency or radio-frequency plate output power.

GENERAL CHARACTERISTICS

ELECTRICAL

	Min.	Nom.	Max.	
Filament: Thoriated Tungsten				
Voltage		7.5		volts
Current	73		78	amperes
Amplification Factor (Grid-Screen)	4.25		5.0	amperes

Direct Interelectrode Capacitances, Grounded Cathode:

Input	108		122	uuf
Output	18		23	uuf
Feedback			1.0	uuf

Direct Interelectrode Capacitances, Grounded Grid and Screen:

	Min.	Max.	
Input	48	58	uuf
Output	18	23	uuf
Feedback		0.14	uuf

MECHANICAL

Base	Special concentric
Maximum Seal Temperature	250° C
Maximum Anode-Core Temperature	250° C
Recommended Socket	Eimac SK-300A
Recommended Air Chimney	Eimac SK-1306
Operating Position	Axis vertical, base up or down

Maximum Dimensions:

Height	9.13 inches
Diameter	7.05 inches
Cooling	Forced air
Net Weight	12.2 pounds
Shipping Weight (Approximate)	23 pounds

(Effective 3-1-61) Copyright 1961 by Eitel-McCullough, Inc.

RADIO-FREQUENCY POWER AMPLIFIER OR OSCILLATOR (Up to 110 megacycles)

Class-C Telegraphy or FM Telephony (Key-down conditions)

MAXIMUM RATINGS

D-C PLATE VOLTAGE	up to 30 megacycles	7500	MAX. VOLTS
	30 to 60 megacycles	7000	MAX. VOLTS
	60 to 110 megacycles	6500	MAX. VOLTS
D-C SCREEN VOLTAGE		1500	MAX. VOLTS
D-C PLATE CURRENT	up to 30 megacycles	3	MAX. AMPERES
	30 to 60 megacycles	2.8	MAX. AMPERES
	60 to 110 megacycles	2.6	MAX. AMPERES
PLATE DISSIPATION		10,000	MAX. WATTS
SCREEN DISSIPATION		250	MAX. WATTS
GRID DISSIPATION		75	MAX. WATTS

TYPICAL OPERATION
(Frequencies below 30 megacycles)

D-C Plate Voltage	7500	volts
D-C Screen Voltage	500	volts
D-C Grid Voltage	—350	volts
D-C Plate Current	2.8	amperes
D-C Screen Current	0.5	ampere
D-C Grid Current	0.25	ampere
Peak R-F Grid Voltage	590	volts
Driving Power	150	watts
Plate Dissipation	5000	watts
Plate Output Power	16,000	watts

PLATE-MODULATED RADIO-FREQUENCY POWER AMPLIFIER

Class-C Telephony (Carrier conditions except where noted)

MAXIMUM RATINGS

D-C PLATE VOLTAGE	5000	MAX. VOLTS
D-C SCREEN VOLTAGE	1000	MAX. VOLTS
D-C PLATE CURRENT	2.5	MAX. AMPERES
PLATE DISSIPATION*	6650	MAX. WATTS
SCREEN DISSIPATION	250	MAX. VOLTS
GRID DISSIPATION	75	MAX. WATTS

*Corresponds to 10,000 watts at 100-percent sine-wave modulation.

TYPICAL OPERATION (Frequencies below 30 megacycles)

D-C Plate Voltage	5000	volts
D-C Screen Voltage	500	volts
Peak A-F Screen Voltage (For 100-percent modulation)	450	Volts
D-C Grid Voltage	—400	volts
D-C Plate Current	1.4	amperes
D-C Screen Current	0.26	ampere
D-C Grid Current	0.05	ampere
Peak R-F Grid Voltage	520	volts
Grid Driving Power	25	watts
Plate Dissipation	1100	watts
Plate Output Power	5.8	kilowatts

AUDIO-FREQUENCY AMPLIFIER OR MODULATOR

Class-AB_1

MAXIMUM RATINGS

D-C PLATE VOLTAGE	7500	MAX. VOLTS
D-C SCREEN VOLTAGE	1500	MAX. VOLTS
D-C PLATE CURRENT	4.0	MAX. AMPERES
PLATE DISSIPATION	10,000	MAX. WATTS
SCREEN DISSIPATION	250	MAX. WATTS
GRID DISSIPATION	75	MAX. WATTS

TYPICAL OPERATION, two tubes

D-C Plate Voltage	4000	5000	6000	7500	volts
D-C Screen Voltage	1500	1500	1500	1500	volts
D-C Grid Voltage	—315	—320	—330	—340	volts
Max.-Signal Plate Current	6.66	6.66	6.66	6.66	ampere
Zero-Signal Plate Current*	0.50	0.50	0.50	0.50	ampere
Max.-Signal Screen Current	0.33	0.32	0.30	0.25	ampere
Zero-Signal Screen Current	0	0	0	0	ampere
Peak A-F Driving Voltage	305	310	320	330	volts
Driving Power	0	0	0	0	watts
Load Resistance, Plate-to-Plate	940	1320	1700	2280	ohms
Max.-Signal Plate Dissipation	6,670	7,950	8,100	9,050	watts
Max.-Signal Plate Output Power	13,300	17,500	23,800	31,900	watts

*Per Tube

RADIO-FREQUENCY LINEAR AMPLIFIER

Class-AB_1

MAXIMUM RATINGS

D-C PLATE VOLTAGE	7500	MAX. VOLTS
D-C SCREEN VOLTAGE	1500	MAX. VOLTS
D-C PLATE CURRENT	4.0	MAX. AMPERES
PLATE DISSIPATION	10,000	MAX. WATTS
SCREEN DISSIPATION	250	MAX. WATTS
GRID DISSIPATION	75	MAX. WATTS

TYPICAL OPERATION, Peak-Envelope or Modulation-Crest Conditions,
(Frequencies below 30 megacycles)

D-C Plate Voltage	7500	volts
D-C Screen Voltage	1500	volts
D-C Grid Voltage*	—340	volts
Max.-Signal Plate Current	3.33	amperes
Zero-Signal Plate Current	0.50	ampere
Max.-Signal Screen Current	.125	ampere
Peak R-F Grid Voltage	330	volts
Driving Power	0	watts
Plate Dissipation	9050	watts
Plate Output Power**	15,950	watts

*Adjust grid voltage to obtain specified Zero-Signal plate current.
**PEP output or r-f output power at crest of modulation envelope.

NOTE: In most cases, "TYPICAL OPERATION" data are obtained by calculation from published characteristic curves and confirmed by direct tests. No allowance for circuit losses, either input or output, has been made. Exceptions are distinguished by a listing of "Useful" output power as opposed to "Plate" output power. Values appearing in these groups have been obtained from existing equipment(s) and the output power is that measured at the load.

APPLICATION

MECHANICAL

Mounting—The 4CX10000D must be operated with its axis vertical. The base of the tube may be down or up at the convenience of the circuit designer.

Socket—A new, more efficient Eimac Air-System Socket Type SK-300A has been designed especially for the concentric base terminals of the 4CX10000D. The use of recommended air-flow rates through this socket provides effective forced-air cooling of the tube. Air forced into the bottom of the socket passes over the tube terminals and through an Air Chimney, the SK-1306, into the anode cooling fins.

Cooling—The maximum temperature rating for the external surfaces of the 4CX10000D is 250°C. Sufficient forced-air circulation must be provided to keep the temperature of the anode at the base of the cooling fins and the temperature of the ceramic-metal seals below 250°C. Air-flow requirements to maintain seal temperatures at 200°C in 50°C ambient air are tabulated below.

	SEA LEVEL		10,000 FEET	
Plate Dissipation* (Watts)	Air Flow (CFM)	Pressure Drop (Inches of water)	Air Flow	Pressure Drop (Inches of water)
4000	100	0.3	145	.4
6000	190	0.8	275	1.2
8000	290	1.5	420	2.2
10000	400	2.5	580	3.6

*Since the power dissipated by the filament represents about 560 watts and since grid-plus-screen dissipation can, under some conditions, represent another 200 to 300 watts, allowance has been made in preparing this tabulation for an additional 1000 watts dissipation.

The blower selected in a given application must be capable of supplying the desired air flow at a back pressure equal to the pressure drop shown above plus any drop encountered in ducts and filters.

At other altitudes and ambient temperatures the flow rate must be modified to obtain equivalent cooling. The flow rate and corresponding pressure differential must be determined individually in such cases, using rated maximum temperatures as the criteria for satisfactory cooling.

ELECTRICAL

Filament Operation—The rated filament voltage for the 4CX10000D is 7.5 volts. Filament voltage, as measured at the socket, should be maintained at this value to obtain maximum tube life. In no case should it be allowed to deviate by more than 5 percent from the rated value.

Electrode Dissipation Ratings—The maximum dissipation ratings for the 4CX10000D must be respected to avoid damage to the tube. An exception is the plate dissipation, which may be permitted to rise above the rated maximum during brief periods, such as may occur during tuning.

Control-Grid Operation— The 4CX10000D control grid has a maximum dissipation rating of 75 watts. Precautions should be observed to avoid exceeding this rating. The grid bias and driving power should be kept near the values shown in the "Typical Operation" sections of the data sheet whenever possible.

Screen-Grid Operation—The power dissipated by the screen of the 4CX10000D must not exceed 250 watts.

Screen dissipation, in cases where there is no ac applied to the screen, is the simple product of the screen voltage and the screen current. If the screen voltage is modulated, the screen dissipation will depend upon loading, driving power, and carrier screen voltage.

Screen dissipation is likely to rise to excessive values when the plate voltage, bias voltage, or plate load are removed with filament and screen voltages applied. Suitable protective means must be provided to limit the screen dissipation to 250 watts in the event of circuit failure.

Plate Dissipation—The plate-dissipation rating for the 4CX10000D is 10,000 watts.

When the 4CX10000D is operated as a plate-modulated r-f power amplifier, the input power is limited by conditions not connected with the plate efficiency, which is quite high. Therefore, except during tuning there is little possibility that the 6650-watt maximum plate dissipation rating will be exceeded.

Special Applications—If it is desired to operate this tube under conditions widely different from those given here, write to the Power Grid Tube Marketing Department, Eitel-McCullough, Inc., 301 Industrial Way, San Carlos, California, for information and recommendations.

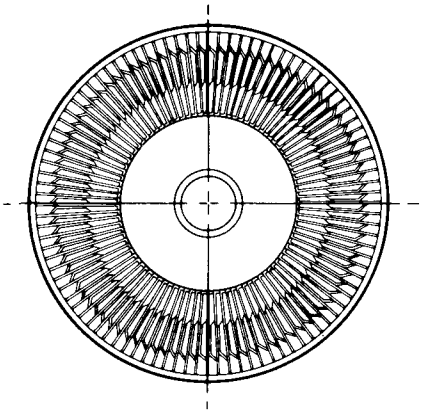

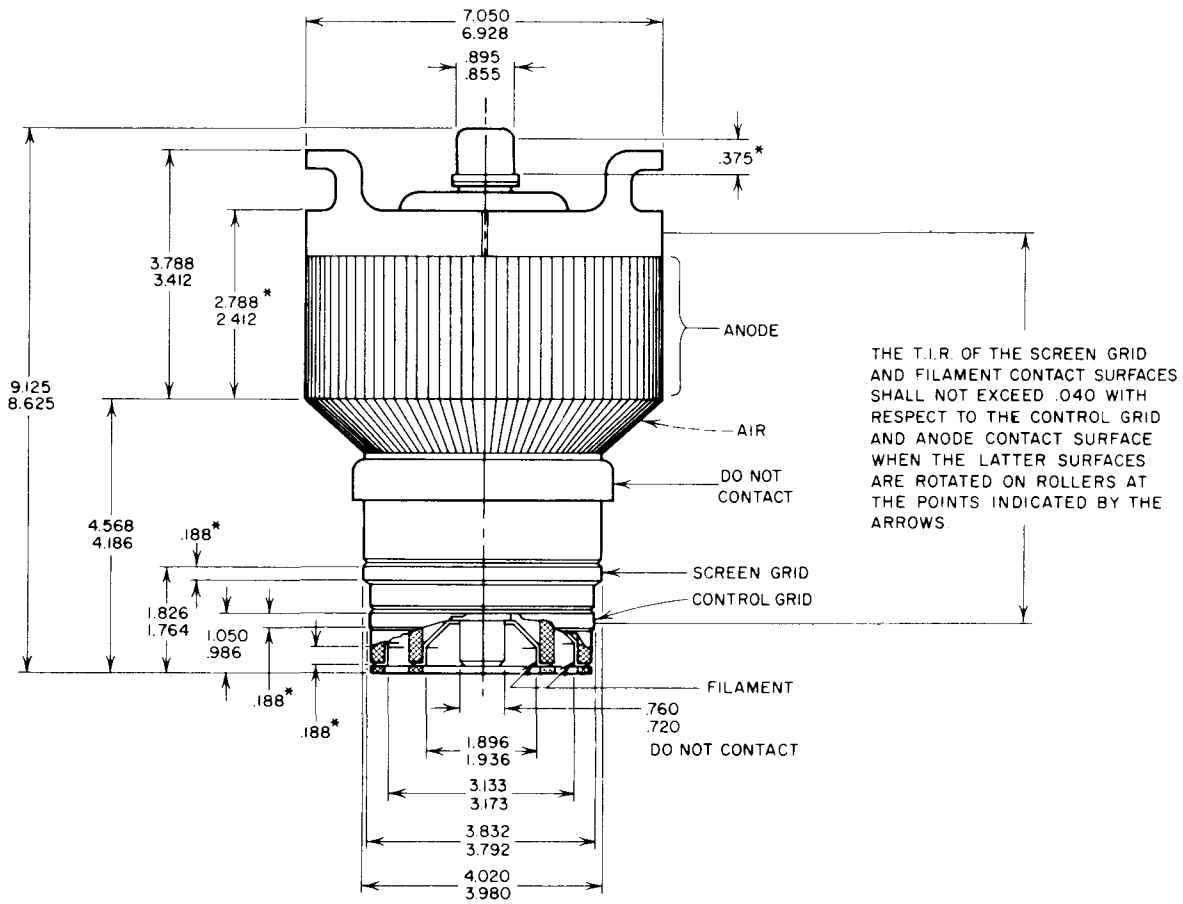

*CONTACT SURFACE
ALL DIMENSIONS IN INCHES

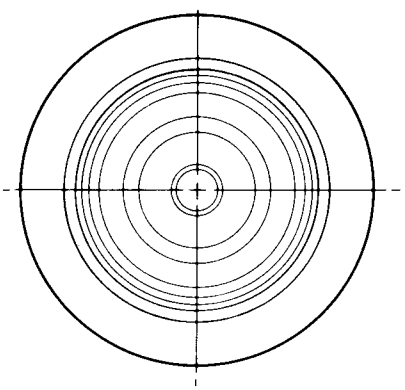

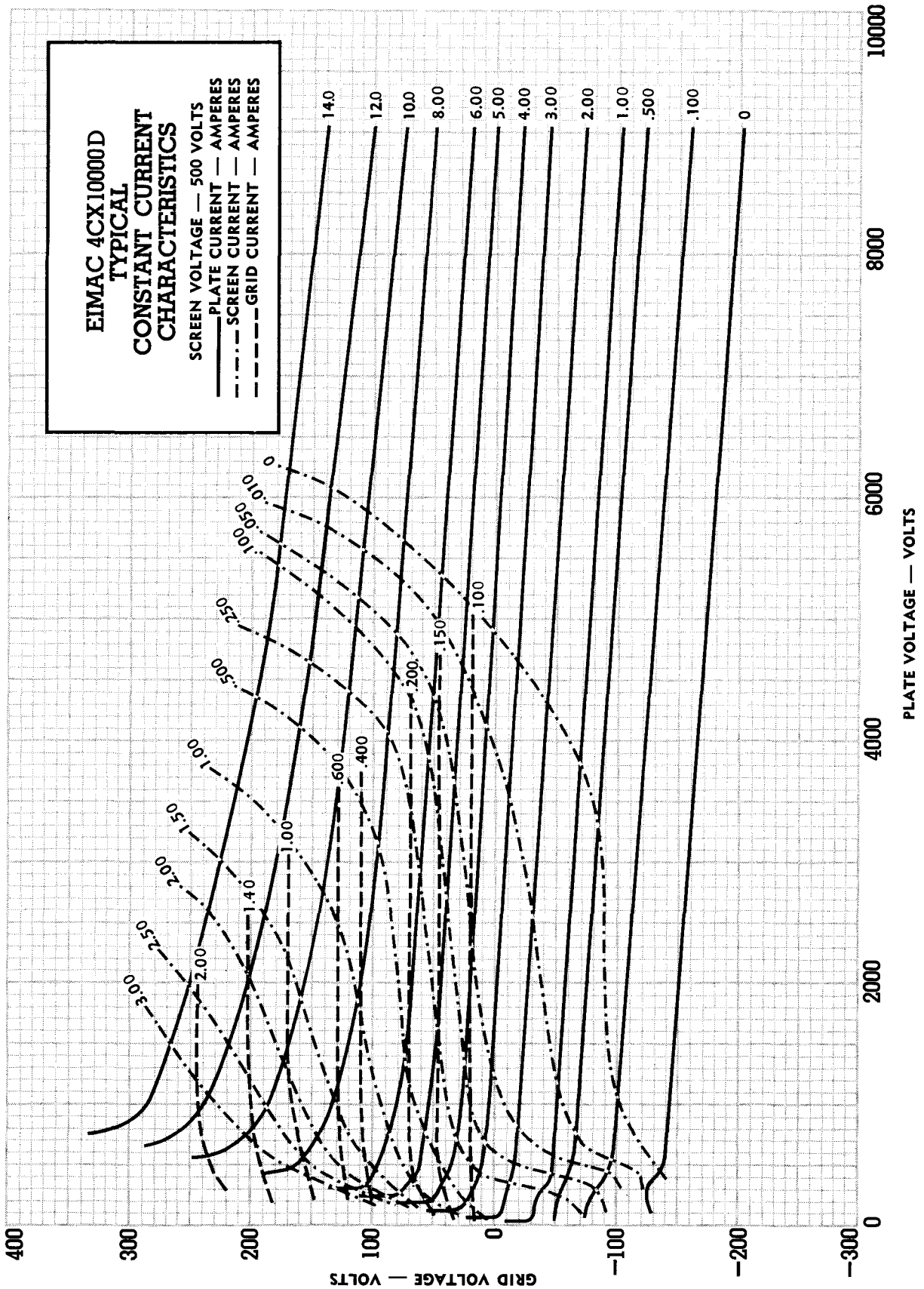
EIMAC 4CX10000D
TYPICAL
CONSTANT CURRENT
CHARACTERISTICS
SCREEN VOLTAGE — 500 VOLTS
PLATE CURRENT — AMPERES
SCREEN CURRENT — AMPERES
GRID CURRENT — AMPERES
14.0
12.0
10.0
8.00
6.00
5.00
4.00
3.00
2.00
1.00
.500
.100
0
3.00
2.50
2.00
1.50
1.00
.500
.250
.100
.050
.010
0
2.00
1.40
1.00
.600
.400
.200
.150
.100
400
300
200
100
0
−100
−200
−300
GRID VOLTAGE — VOLTS
0
2000
4000
6000
8000
10000
PLATE VOLTAGE — VOLTS

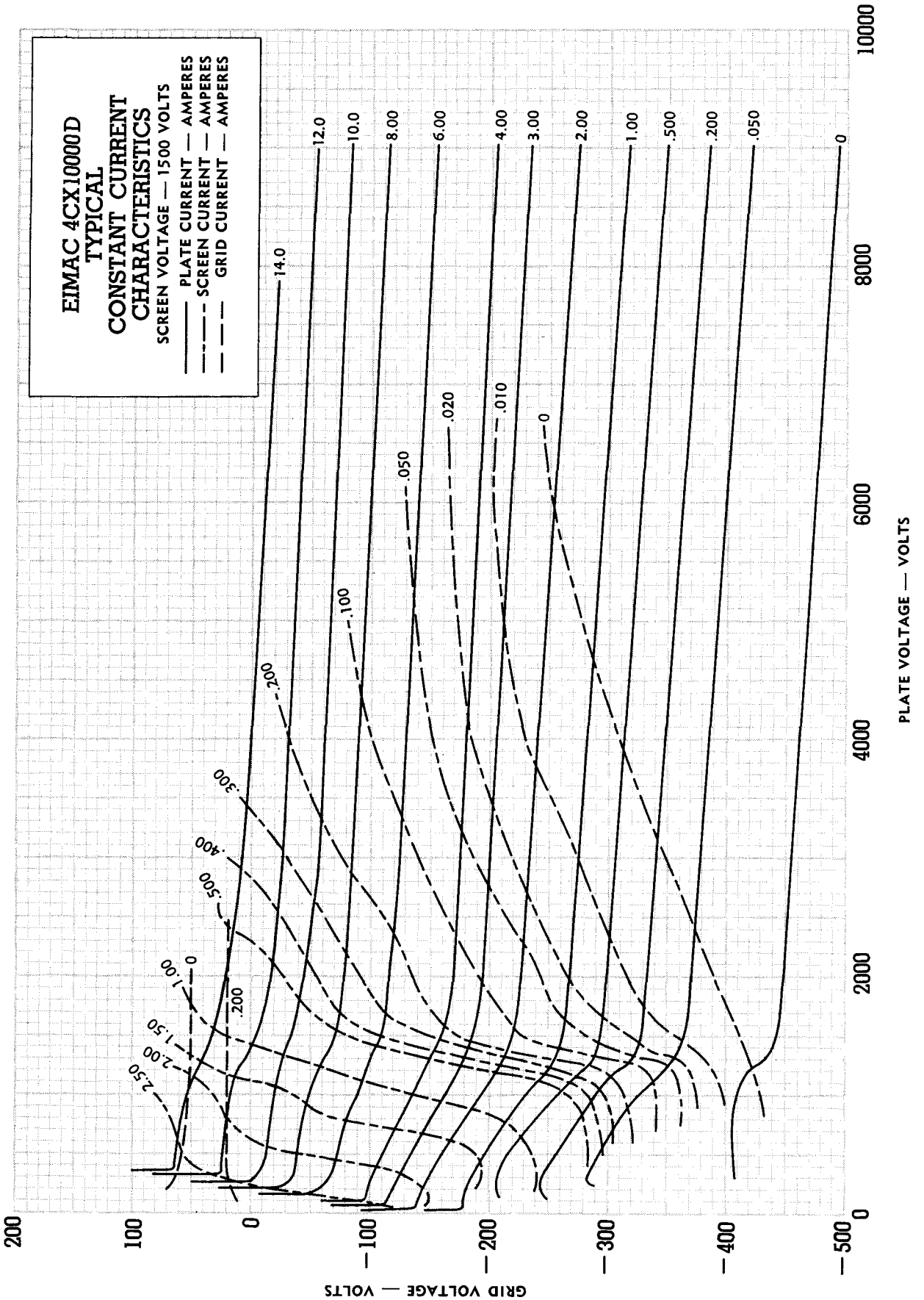

Printed in U.S.A. 973