EIMAC
Division of Varian
SAN CARLOS
CALIFORNIA

# 4CW10,000A

**RADIAL-BEAM POWER TETRODE**

The Eimac 4CW10,000A is a water-cooled, ceramic-metal power tetrode which is electrically identical to the 8171/4CX10,000D (and 8170/4CX5000A, except for plate dissipation). The water-cooled anode is equipped with an integral water jacket and is rated at 12 kilowatts dissipation.

The 4CW10,000A is useful as an oscillator, amplifier or modulator at frequencies up to 110 megacycles, and is particularly suited for use as a linear rf amplifier or or class-AB audio amplifier.

A pair of these tubes operating class AB will deliver more than 30 kilowatts of audio-frequency or radio-frequency plate output power.

## GENERAL CHARACTERISTICS

### ELECTRICAL

| | Min. | Nom. | Max. | |
|---|---|---|---|---|
| Filament: Thoriated Tungsten | | | | |
| Voltage | - | 7.5 | | volts |
| Current | 73 | | 78 | amperes |
| Amplification Factor (Grid-Screen) | - | 4.5 | | |
| Frequency for Maximum Ratings | | - | 30 | Mc |

| Direct Interelectrode Capacitances, Grounded Cathode: | Min. | Max. | |
|---|---|---|---|
| Input | 108 | 122 | uuf |
| Output | 18 | 23 | uuf |
| Feedback | - | 1.0 | uuf |

| Direct Interelectrode Capacitances, Grounded Grid and Screen: | | | |
|---|---|---|---|
| Input | 48 | 58 | uuf |
| Output | 18 | 23 | uuf |
| Feedback | - | 0.16 | uuf |

### MECHANICAL

| | |
|---|---|
| Base | Special concentric |
| Maximum Seal Temperature | 250° C |
| Maximum Anode-Core Temperature | 250° C |
| Recommended Socket | Eimac SK-300A |
| Operating Position | Axis vertical, base up or down |
| Maximum Dimensions: | |
| Height | 11.44 inches |
| Diameter | 4.66 inches |
| Cooling | Water and Forced air |
| Net Weight | 7.5 pounds |
| Shipping Weight (Approximate) | 17 pounds |

(Effective 4-15-63) 1963, 1967 by VARIAN Printed in U.S.A.

## RADIO-FREQUENCY POWER AMPLIFIER OR OSCILLATOR (Up to 110 megacycles)

Class-C Telegraphy or FM Telephony (Key-down conditions)

MAXIMUM RATINGS

| | | | |
|---|---|---|---|
| D-C PLATE VOLTAGE | up to 30 megacycles | 7500 | MAX. VOLTS |
| | 30 to 60 megacycles | 7000 | MAX. VOLTS |
| | 60 to 110 megacycles | 6500 | MAX. VOLTS |
| D-C SCREEN VOLTAGE | | 1500 | MAX. VOLTS |
| D-C PLATE CURRENT | up to 30 megacycles | 3 | MAX. AMPERES |
| | 30 to 60 megacycles | 2.8 | MAX. AMPERES |
| | 60 to 110 megacycles | 2.6 | MAX. AMPERES |
| PLATE DISSIPATION | | 10,000 | MAX. WATTS |
| SCREEN DISSIPATION | | 250 | MAX. WATTS |
| GRID DISSIPATION | | 75 | MAX. WATTS |

TYPICAL OPERATION
(Frequencies below 30 megacycles)

| | | |
|---|---|---|
| D-C Plate Voltage | 7500 | volts |
| D-C Screen Voltage | 500 | volts |
| D-C Grid Voltage | —350 | volts |
| D-C Plate Current | 2.8 | amperes |
| D-C Screen Current | 0.5 | ampere |
| D-C Grid Current | 0.25 | ampere |
| Peak R-F Grid Voltage | 590 | volts |
| Driving Power | 150 | watts |
| Plate Dissipation | 5000 | watts |
| Plate Output Power | 16,000 | watts |

## PLATE-MODULATED RADIO-FREQUENCY POWER AMPLIFIER

*Class-C Telephony (Carrier conditions except where noted)*

MAXIMUM RATINGS

| | | |
|---|---|---|
| D-C PLATE VOLTAGE | 5000 | MAX. VOLTS |
| D-C SCREEN VOLTAGE | 1000 | MAX. VOLTS |
| D-C PLATE CURRENT | 2.5 | MAX. AMPERES |
| PLATE DISSIPATION* | 6650 | MAX. WATTS |
| SCREEN DISSIPATION | 250 | MAX. WATTS |
| GRID DISSIPATION | 75 | MAX. WATTS |

*Corresponds to 10,000 watts at 100-percent sine-wave modulation.

TYPICAL OPERATION (Frequencies below 30 megacycles)

| | | |
|---|---|---|
| D-C Plate Voltage | 5000 | volts |
| D-C Screen Voltage | 500 | volts |
| Peak A-F Screen Voltage (For 100-percent modulation) | 500 | volts |
| D-C Grid Voltage | —350 | volts |
| D-C Plate Current | 2.4 | amperes |
| D-C Screen Current | 0.4 | ampere |
| D-C Grid Current | 0.22 | ampere |
| Peak R-F Grid Voltage | 550 | volts |
| Grid Driving Power | 120 | watts |
| Plate Dissipation | 3500 | watts |
| Plate Output Power | 8.5 | kilowatts |

## AUDIO-FREQUENCY AMPLIFIER OR MODULATOR

Class-$AB_1$

MAXIMUM RATINGS

| | | |
|---|---|---|
| D-C PLATE VOLTAGE | 7500 | MAX. VOLTS |
| D-C SCREEN VOLTAGE | 1500 | MAX. VOLTS |
| D-C PLATE CURRENT | 4.0 | MAX. AMPERES |
| PLATE DISSIPATION | 12,000 | MAX. WATTS |
| SCREEN DISSIPATION | 250 | MAX. WATTS |
| GRID DISSIPATION | 75 | MAX. WATTS |

TYPICAL OPERATION, two tubes

| | | | | | |
|---|---|---|---|---|---|
| D-C Plate Voltage | 4000 | 5000 | 6000 | 7500 | volts |
| D-C Screen Voltage | 1500 | 1500 | 1500 | 1500 | volts |
| D-C Grid Voltage | —315 | —320 | —330 | —340 | volts |
| Max.-Signal Plate Current | 6.66 | 6.66 | 6.66 | 6.66 | ampere |
| Zero-Signal Plate Current* | 0.50 | 0.50 | 0.50 | 0.50 | ampere |
| Max.-Signal Screen Current | 0.33 | 0.32 | 0.30 | 0.25 | ampere |
| Zero-Signal Screen Current | 0 | 0 | 0 | 0 | ampere |
| Peak A-F Driving Voltage | 305 | 310 | 320 | 330 | volts |
| Driving Power | 0 | 0 | 0 | 0 | watts |
| Load Resistance, Plate-to-Plate | 940 | 1320 | 1700 | 2280 | ohms |
| Max.-Signal Plate Dissipation* | 6,670 | 7,950 | 8,100 | 9,050 | watts |
| Max.-Signal Plate Output Power | 13,300 | 17,500 | 23,800 | 31,900 | watts |

*Per Tube

## RADIO-FREQUENCY LINEAR AMPLIFIER

Class-$AB_1$

MAXIMUM RATINGS

| | | |
|---|---|---|
| D-C PLATE VOLTAGE | 7500 | MAX. VOLTS |
| D-C SCREEN VOLTAGE | 1500 | MAX. VOLTS |
| D-C PLATE CURRENT | 4.0 | MAX. AMPERES |
| PLATE DISSIPATION | 12,000 | MAX. WATTS |
| SCREEN DISSIPATION | 250 | MAX. WATTS |
| GRID DISSIPATION | 75 | MAX. WATTS |

TYPICAL OPERATION, Peak-Envelope or Modulation-Crest Conditions,
(Frequencies below 30 megacycles)

| | | |
|---|---|---|
| D-C Plate Voltage | 7500 | volts |
| D-C Screen Voltage | 1500 | volts |
| D-C Grid Voltage* | —340 | volts |
| Max.-Signal Plate Current | 3.33 | amperes |
| Zero-Signal Plate Current | 0.50 | ampere |
| Max.-Signal Screen Current | 0.125 | ampere |
| Peak R-F Grid Voltage | 330 | volts |
| Driving Power | 0 | watts |
| Plate Dissipation | 9050 | watts |
| Plate Output Power** | 15,950 | watts |

*Adjust grid voltage to obtain specified Zero-Signal plate current.
**PEP output or r-f output power at crest of modulation envelope.

NOTE: In most cases, "TYPICAL OPERATION" data are obtained by calculation from published characteristic curves. No allowance for circuit losses, either input or output, has been made.

# APPLICATION

## MECHANICAL

**Mounting**—The 4CW10,000A must be operated with its axis vertical. The base of the tube may be down or up at the convenience of the circuit designer.

**Socket**—The Eimac SK-300A air-system socket may be used with the 4CW10,000A. The socket has provision for directing cooling air through the socket and over the base seals.

**Cooling**—Base terminal cooling is accomplished by directing air through the socket and over the filament and grid seals. Anode cooling is accomplished by circulating water through the integral water jacket. The table below lists minimum water flow rates for proper cooling at various plate dissipation levels.

| Minimum Cooling Water Requirement | | |
|---|---|---|
| Plate Dissipation (kw) | Quantity (gpm) | Pressure Drop (psi) |
| 6 | 4.0 | 2.2 |
| 8 | 5.1 | 3.1 |
| 10 | 6.3 | 4.3 |
| 12 | 7.4 | 5.5 |

Note: Since power dissipated by the filaments represented about 560 watts and grid plus screen dissipation can represent another 325 watts, an extra 900 watts has been added to plate dissipation in preparing this tabulation.

Maximum outlet-water temperature must never exceed 70°C and inlet-water pressure should be limited to 50 psi.

When the tube is mounted with its anode up, the water inlet is on the outer connector; when the anode is down, the inlet is the center connector. Water and air flow should start whenever filament voltage is applied. There is no danger in removing cooling water and air simultaneously with power removal.

Base cooling may be accomplished by directing approximately 30 cfm of air through the socket and over the seals. Pressure drop will be approximately 0.1 inch of water. An alternate method for frequencies below 30 Mc is to direct approximately 10 cfm through a ¾" ID tube directly at the center stud. The jet should be no more than two inches from the stud.

## ELECTRICAL

**Filament Operation**—The rated filament voltage for the 4CW10,000A is 7.5 volts. Filament voltage, as measured at the socket, should be maintained at this value to obtain maximum tube life. In no case should it be allowed to deviate by more than plus or minus 5 percent from the rated value.

**Electrode Dissipation Ratings**—The maximum dissipation ratings for the 4CW10,000A must be respected to avoid damage to the tube. An exception is the plate dissipation, which may be permitted to rise above the rated maximum during brief periods, such as may occur during tuning.

**Control Grid Operation**—The 4CW10,000A control grid has a maximum dissipation rating of 75 watts. Precautions should be observed to avoid exceeding this rating. The grid bias and driving power should be kept near the values shown in the "Typical Operation" sections of the data sheet whenever possible.

**Screen-Grid Operation**—The power dissipated by the screen of the 4CW10,000A must not exceed 250 watts.

Screen dissipation, in cases where there is no ac applied to the screen, is the simple product of the screen voltage and the screen current. If the screen voltage is modulated, the screen dissipation will depend upon loading, driving power, and carrier screen voltage.

Screen dissipation is likely to rise to excessive values when the plate voltage, bias voltage, or plate load are removed with filament and screen voltages applied. Suitable protective means must be provided to limit the screen dissipation to 250 watts in the event of circuit failure.

**Plate Dissipation**—The plate-dissipation rating for the 4CW10,000A is 10,000 watts for most applications, but for audio and SSB amplifier applications, the maximum allowable dissipation is 12,000 watts.

When the 4CW10,000A is operated as a plate-modulated rf power amplifier, the input power is limited by conditions not connected with the plate efficiency, which is quite high. Therefore, except during tuning there is little possibility that the 6650-watt maximum plate dissipation rating will be exceeded.

**Special Applications**—If it is desired to operate this tube under conditions widely different from those given here, write to the Power Grid Tube Marketing Department, Eitel-McCullough, Inc., 301 Industrial Way, San Carlos, California, for information and recommendations.

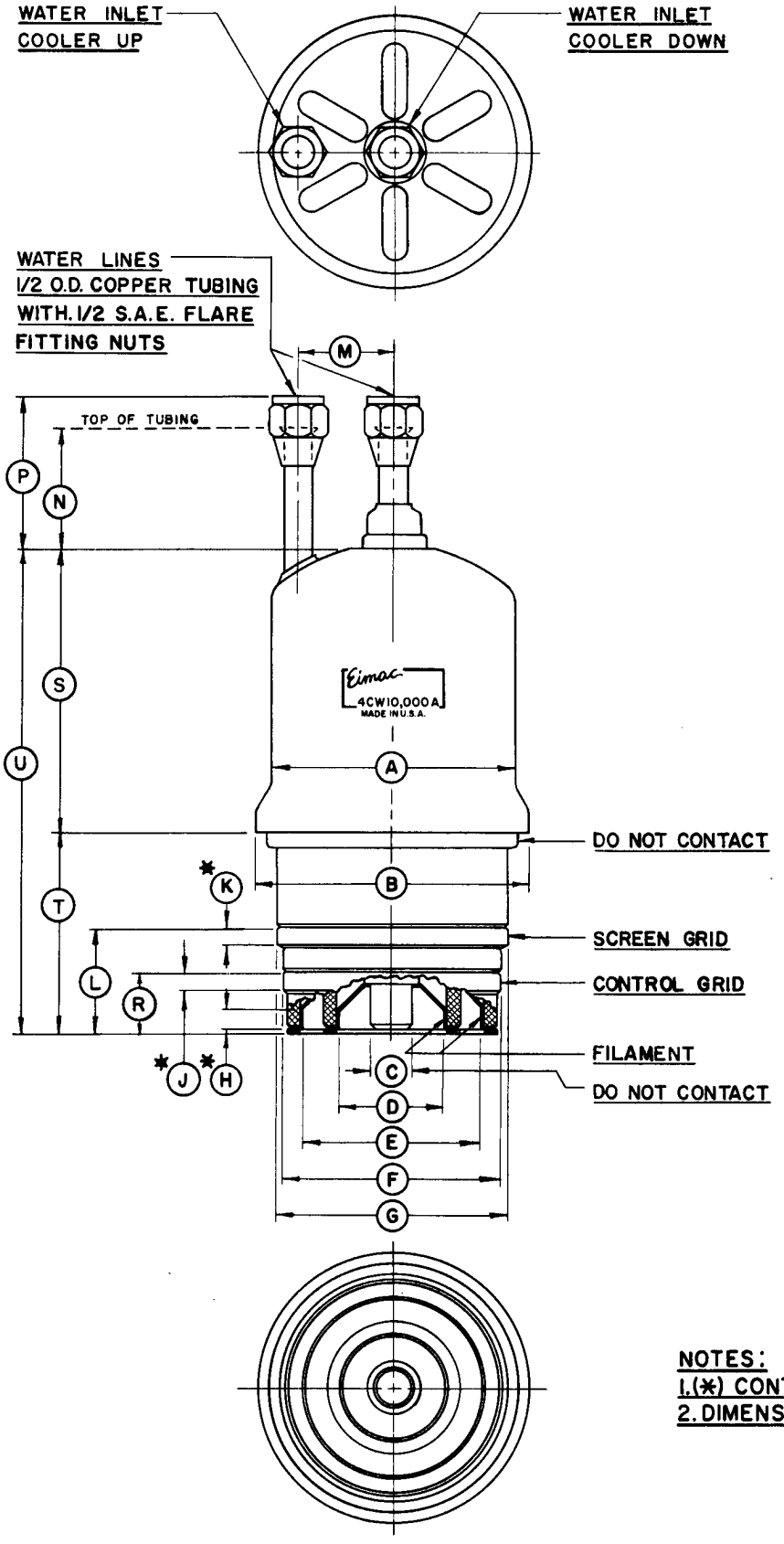


| DIMENSION DATA | | | |
|---|---|---|---|
| REF | NOM. | MIN. | MAX. |
| A | | 4.094 | 4.156 |
| B | | 4.594 | 4.656 |
| C | | .720 | .760 |
| D | | 1.896 | 1.936 |
| E | | 3.133 | 3.173 |
| F | | 3.792 | 3.832 |
| G | | 3.980 | 4.020 |
| H | | .188 | |
| J | | .188 | |
| K | | .188 | |
| L | | 1.764 | 1.826 |
| M | | 1.500 | 1.750 |
| N | | 1.937 | 2.187 |
| P | | 2.312 | 2.812 |
| R | | .986 | 1.050 |
| S | | 4.780 | 5.025 |
| T | | 3.350 | 3.650 |
| U | | 8.125 | 8.625 |
| | | | |
| | | | |
| | | | |

These dimensions reflect standard manufacturing tolerances. They should not be used as the basis for purchase specifications unless checked with Eitel-McCullough, Inc.

NOTES:
1. (*) CONTACT SURFACE.
2. DIMENSIONS IN INCHES.

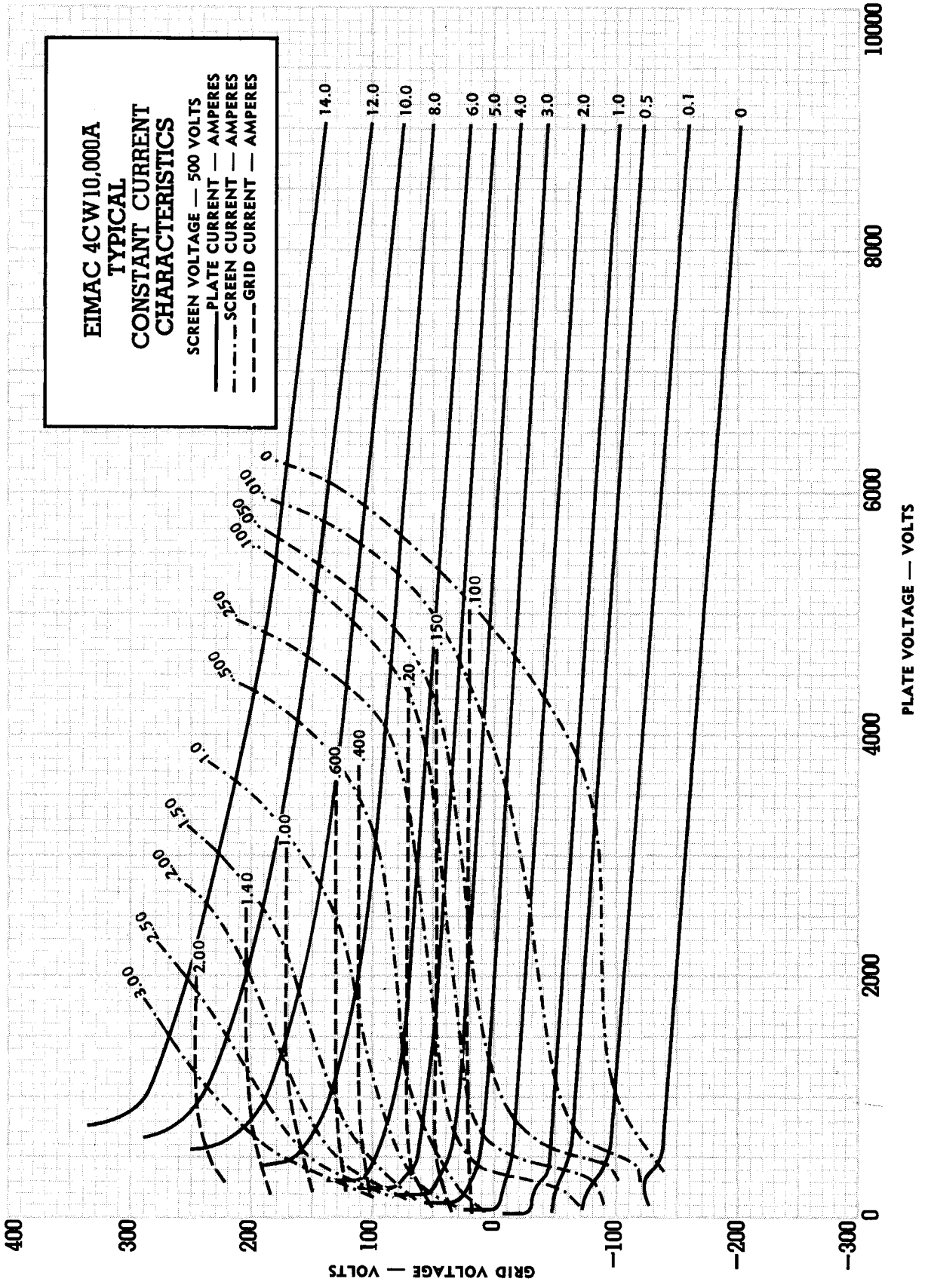
EIMAC 4CW10,000A
TYPICAL
CONSTANT CURRENT
CHARACTERISTICS
SCREEN VOLTAGE — 500 VOLTS
PLATE CURRENT — AMPERES
SCREEN CURRENT — AMPERES
GRID CURRENT — AMPERES
14.0
12.0
10.0
8.0
6.0
5.0
4.0
3.0
2.0
1.0
0.5
0.1
0
PLATE VOLTAGE — VOLTS
GRID VOLTAGE — VOLTS
0
2000
4000
6000
8000
10000
400
300
200
100
0
−100
−200
−300

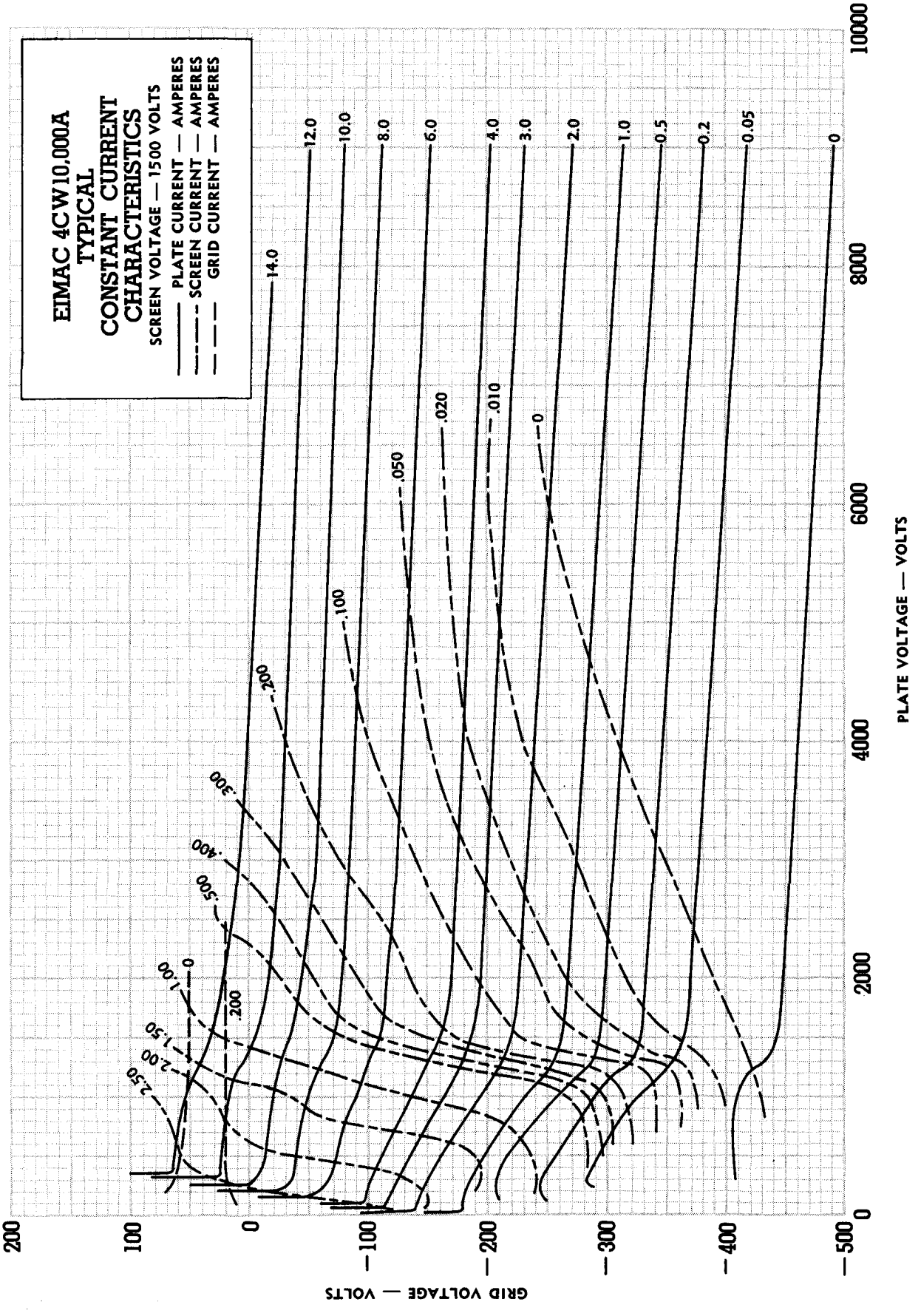
EIMAC 4CW10,000A
TYPICAL
CONSTANT CURRENT
CHARACTERISTICS
SCREEN VOLTAGE — 1500 VOLTS
PLATE CURRENT — AMPERES
SCREEN CURRENT — AMPERES
GRID CURRENT — AMPERES
14.0
12.0
10.0
8.0
6.0
4.0
3.0
2.0
1.0
0.5
0.2
0.05
0
.100
.050
.020
.010
0
.200
.300
.400
.500
1.00
0
.200
1.50
2.00
2.50
200
100
0
−100
−200
−300
−400
−500
0
2000
4000
6000
8000
10000
PLATE VOLTAGE — VOLTS
GRID VOLTAGE — VOLTS