TECHNICAL DATA

4CW100,000E

HIGH-POWER
WATER-COOLED
TETRODE

DESCRIPTION

The 4CW100,000E is a ceramic/metal, high-power tetrode for applications requiring tube outputs from 100 to 250 kilowatts. It is ideal for use as a Class C rf amplifier or oscillator, a Class AB rf linear amplifier, or a Class AB push-pull af amplifier or modulator as well as a plate- and screen-modulated Class C rf amplifier. In pulse-modulator service, it can deliver a peak output of 4 megawatts. The tube is characterized by low input and feedback capacitances and low internal lead inductances. Its rugged mesh thoriated-tungsten filament provides ample emission for long operating life. The water-cooled anode dissipates 100 kilowatts when used with the EIMAC SK-2100 water jacket.

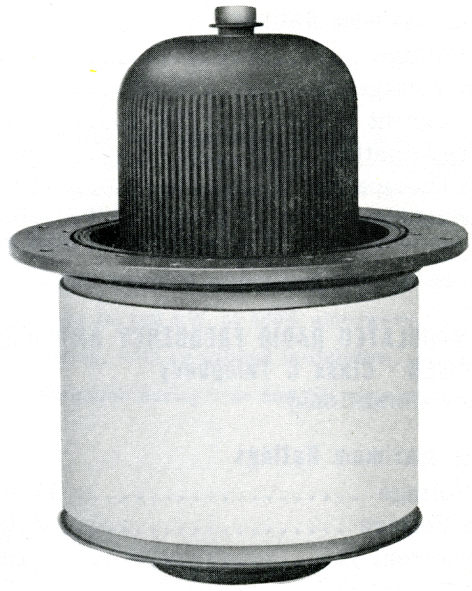

4CW100,000E without SK-2100 Water Jacket

GENERAL CHARACTERISTICS[1]

ELECTRICAL

Filament	Thoriated Tungsten
Voltage	15.5 ± 0.75 V
Current, at 15.5 V	215 A
Direct Interelectrode Capacitances,	
Cathode grounded	
Input	370 pF
Output	60 pF
Feedback	1.0 pF
Grid grounded	
Input	175 pF
Output	60 pF
Feedback	0.35 pF
Maximum Frequency, for maximum CW ratings	108 MHz

PHYSICAL

Dimensions	See Outline Drawing
Net Weight	
Tube only	38.5 lb; 17.5 kg
Tube and water jacket	47.0 lb; 21.4 kg
Operating Position	Vertical, base up or down
Anode Cooling	Water
Base Cooling	Forced Air
Operating Temperature, maximum	
Ceramic/metal seals and envelope	250 °C
Anode Water Jacket, required	EIMAC SK-2100
Air System Socket, recommended	EIMAC SK-2000 Series
Base	Special

MAXIMUM RATINGS AND TYPICAL OPERATING CONDITIONS

RADIO FREQUENCY LINEAR AMPLIFIER, Class AB

Absolute Maximum Ratings

Plate Voltage	20 kVdc
Screen Voltage	2.5 kVdc
Plate Current	16 Adc
Plate Dissipation	100 kW
Screen Dissipation	1750 W
Grid Dissipation	500 W

Typical Operation, Class AB_1, Grid Driven

Peak Envelope or Modulation Crest Conditions

Plate Voltage	18 kVdc
Screen Voltage	1.5 kVdc
Grid Voltage[2]	-320 Vdc
Zero-Signal Plate Current	4 Adc
Single-Tone Plate Current	13.5 Adc
Peak rf Grid Voltage, approx	300 v
Plate Dissipation	75 kW
Plate Output Power	168 kW
Resonant Load Impedance	697 Ω

2479 9/70 © Varian 1970 Printed in U.S.A.

MAXIMUM RATINGS AND TYPICAL OPERATING CONDITIONS

RADIO FREQUENCY POWER AMPLIFIER OR OSCILLATOR
Class C Telegraphy or FM Telephony
(Key-down Conditions)

Absolute Maximum Ratings

Plate Voltage	20	kVdc
Screen Voltage	2.5	kVdc
Plate Current	16	Adc
Plate Dissipation	100	kW
Screen Dissipation	1750	W
Grid Dissipation	500	W

Typical Operation

Plate Voltage	20	kVdc
Screen Voltage	1.5	kVdc
Grid Voltage	-800	Vdc
Plate Current	15.2	Adc
Screen Current, approx	567	mAdc
Grid Current, approx	125	mAdc
Peak rf Grid Voltage, approx	900	v
Driving Power, calculated, approx	120	W
Plate Dissipation	54	kW
Plate Output Power	220	kW
Resonant Load Impedance	575	Ω

PLATE MODULATED RADIO FREQUENCY AMPLIFIER
GRID DRIVEN - Class C Telephony
(Carrier Conditions)

Absolute Maximum Ratings

Plate Voltage	17.5	kVdc
Screen Voltage	2.0	kVdc
Plate Current	16	Adc
Plate Dissipation[3]	67	kW
Screen Dissipation[4]	1750	W
Grid Dissipation[4]	500	W

Typical Operation

Plate Voltage	15	kVdc
Screen Voltage	750	Vdc
Grid Voltage	-600	Vdc
Plate Current	11.7	Adc
Screen Current, approx	875	mAdc
Grid Current, approx	660	mAdc
Peak af Screen Voltage, 100% mod., approx	750	v
Peak rf Grid Voltage, approx	800	v
Driving Power, calculated	530	W
Plate Dissipation	35	kW
Plate Output Power	140	kW
Resonant Load Impedance	620	Ω

AUDIO FREQUENCY POWER AMPLIFIER OR MODULATOR
GRID DRIVEN - Class AB_1, Sinusoidal Wave

Absolute Maximum Ratings, per tube

Plate Voltage	20	kVdc
Screen Voltage	2.5	kVdc
Plate Current	16	Adc
Plate Dissipation	100	kW
Screen Dissipation	1750	W
Grid Dissipation	500	W

Typical Operation, two tubes

Plate Voltage	15	kVdc
Screen Voltage	1.5	kVdc
Grid Voltage, approx[2]	-345	Vdc
Zero-Signal Plate Current	6	Adc
Maximum-Signal Plate Current	19.5	Adc
Maximum-Signal Screen Current, approx	830	mAdc
Peak af Grid Voltage, per tube	275	v
Maximum-Signal Plate Dissipation, per tube	46	kW
Plate Output Power	200	kW
Load Resistance, plate to plate	1825	Ω

PULSE MODULATOR SERVICE

Absolute Maximum Ratings

Plate Voltage	40	kVdc
Screen Voltage	2.5	kVdc
Grid Voltage	-2.0	kVdc
Peak Cathode Current	200	a
Plate Dissipation, during the pulse[5]	1.0	MW
Plate Dissipation, average	100	kW
Screen Dissipation, average	1750	W
Grid Dissipation, average	500	W
Pulse Length	10	ms

Typical Operation

Plate Voltage	40	kVdc
Plate Current, pulse	110	a
Screen Voltage	2.5	kVdc
Screen Current, pulse, approx	12	a
Grid Voltage	-1.2	kVdc
Grid Current, pulse, approx	400	ma
Positive Grid Voltage, pulse	110	v
Duty	6	%
Output Voltage, pulse	37	kv
Input Power, pulse	4.4	Mw
Output Power, pulse	4.1	Mw
Cathode Current, pulse, approx	122	a

TYPICAL OPERATION values are obtained by calculations from published characteristic curves. To obtain the specified plate current at the specified bias, screen, and plate voltages, adjustment of the rf grid voltage is assumed. If this procedure is followed, there will be little variation in output power when the tube is replaced, even though there may be some variation in grid and screen currents. The grid and screen currents which occur when the desired plate current is obtained are incidental and vary from tube to tube. These current variations cause no performance degradation providing the circuit maintains the correct voltage in the presence of the current variations. If grid bias is obtained principally by means of a grid resistor, the resistor must be adjustable to produce the required bias voltage when the correct rf grid voltage is applied.

RANGE VALUES FOR EQUIPMENT DESIGN

	Min	Max
Filament Current, at 15.5 V ...	200	230 A
Cutoff Bias, at Eb = 25 kVdc, Ec2 = 1500 Vdc, Ib = 10 mAdc	---	-650 Vdc
Interelectrode Capacitances,		
Cathode grounded		
Input	350	390 pF
Output	55	65 pF
Feedback	---	1.2 pF
Grid grounded		
Input	160	190 pF
Output	55	65 pF
Feedback	---	0.5 pF

NOTES:

1. Characteristics and operating values are based upon performance tests. These figures may change without notice as the result of additional data or product refinement. The EIMAC Division of Varian should be consulted before using this information for final equipment design.
2. Adjust to give specified zero-signal plate current.
3. Corresponds to 100 kW at 100% sine-wave modulation.
4. Average value, with or without modulation.
5. Power dissipated during rise and fall time neglected.

APPLICATION NOTES

MOUNTING — The 4CW100,000E must be mounted with its major axis vertical. The tube base may be either up or down, at the discretion of the circuit designer.

SOCKETING — An EIMAC SK-2000 series Socket, or equivalent, is recommended.

ANODE WATER JACKET — The EIMAC SK-2100 Water Jacket must be used to provide anode cooling. To achieve an anode dissipation of 100 kilowatts, the water jacket must be installed over the tube anode and adequate water flow provided.

COOLING — Anode cooling is accomplished by circulating water through the SK-2100 Water Jacket. Insufficient water flow will cause the anode temperature to rise to levels which will shorten tube life. Also, if the coolant lines become clogged, enough steam pressure may be generated to rupture the water jacket and destroy the tube. The following table lists the minimum cooling water requirements at various dissipation levels with a maximum inlet water temperature of 50 °C.

Anode Dissipation (kW)	Minimum Water Flow (gpm)	Approximate Pressure Drop (psi)
20	5.0	2.8
40	9.0	5.8
60	12.5	9.3
80	16.5	14.2
100	20.0	19.2

Note: Since the filament dissipates about 3500 watts, and the grid-plus-screen can, under some conditions, dissipate another 2250 watts, the table allows for an additional dissipation of 5750 watts.

Outlet water temperature must never exceed 70 °C and inlet water pressure should be limited to 100 psi. Direction of water flow is optional.

Tube life can be seriously affected by the condition of the cooling water. If it becomes ionized, copper-oxide deposits form on the inside of the water jacket causing localized anode heating and eventual tube failure.

To insure minimum electrolysis, and power loss, the water resistance at 20 °C should be greater than 50,000 ohms/cm^3, preferably 250,000 ohms/cm^3 or higher. The relative water resistance can be continuously monitored by measuring the leakage current through a short section of the insulating hose, using metal nipples or fittings as electrodes.

Auxiliary forced-air cooling, of the tube base is required to maintain filament- and grid-seal temperatures below 250 °C. An air flow of approximately 120 ft^3/min at 50 °C maximum and sea level should be directed, through an EIMAC SK-2000 series socket or equivalent, toward the filament- and grid-seal areas.

Both anode and base cooling should be applied before or simultaneously with the application of electrode voltages, including the filament. Base cooling should continue for about three minutes after the removal of electrode voltages to allow the tube to cool properly.

FILAMENT OPERATION — At rated filament voltage, the peak emission of a 4CW100,000E is many times greater than the amount needed for communication service. Reducing the filament voltage decreases the filament temperature. A small decrease in filament temperature substantially increases filament life. The correct value of filament-voltage should be determined for the particular applications. First, gradually reduce the filament voltage to the point where there is a noticeable reduction in plate current or power output, or an increase in distortion. Then increase the voltage several tenths of a volt above the value where performance degradation occurred; this is the proper operating voltage. Filament voltage should always be measured at the tube base or socket using an rms responding meter. The above procedure should be performed periodically to assure optimum tube life.

GRID OPERATION — The maximum control-grid dissipation is 500 watts, determined approximately by the product of grid current and peak positive grid voltage.

Under some operating conditions, the control grid may exhibit a negative-resistance characteristic. This may occur when, with high screen-grid voltage, increasing the drive voltage decreases the grid current. As a result, large values of instantaneous negative grid current can be produced, causing the amplifier to become regenerative. Because this may happen, the driver stage must be designed to tolerate this condition. One technique is to swamp the driver so that the change in load, due to secondary grid emission, is a small percentage of the total driver load.

SCREEN OPERATION — The maximum screen-grid dissipation is 1750 watts. With no ac applied to the screen, dissipation is simply the product of dc screen voltage and dc screen current. With screen modulation, dissipation is dependent on rms screen voltage and rms screen current. Plate voltage, plate loading, or bias voltage must never be removed while filament and screen voltages are present, since the screen dissipation rating will be exceeded. Suitable protective circuitry should be provided.

The 4CW100,000E may exhibit reverse screen current to a greater or lesser degree depending on operating conditions. The screen supply voltage must be maintained constant for any values of negative and positive screen current which may be encountered. Dangerously high plate current may flow if the screen power supply exhibits a rising voltage characteristic with negative screen current. Stabilization may be accomplished with a bleeder resistor connected from screen to cathode, or an electron-tube regulator circuit may be employed in the screen supply. A bleeder resistor must be used if a series electron-tube regulator is employed.

PLATE DISSIPATION — The rated plate dissipation of 100 kilowatts, attainable with water cooling, provides a large margin of safety in most applications. This rating may be exceeded briefly during tuning. When the 4CW100,000E is used as a plate-modulated rf amplifier, plate dissipation under carrier conditions should be limited to 67 kilowatts.

FAULT PROTECTION — In addition to the normal plate-overcurrent interlock, screen-current interlock, and coolant-flow interlock, it is good practice to protect the tube from internal damage caused by an internal plate arc which may occur at high plate voltages.

A protective resistance of 5 to 25 ohms should always be connected in series with each tube anode, to absorb power-supply stored energy if a plate arc should occur. An electronic crowbar, which will discharge power-supply capacitors in a few microseconds after the start of a plate arc, is recommended.

OPERATING HAZARDS

Read the following and take all necessary precautions to safeguard personnel. Safe operating conditions are the responsibility of the equipment designer and the user.

HIGH VOLTAGE — This tube operates at voltages which can be deadly. Equipment must be designed so personnel cannot come in contact with operating voltages. Enclose high-voltage circuits and terminals and provide fail-safe interlocking switch circuits to open the primary circuits of the power supply and to discharge high-voltage condensers whenever access into the enclosure is required.

X-RAY RADIATION — The 4CW100,000E, operating at its rated voltages and currents, is a potential X-ray hazard. Moreover, the X-ray radiation level can increase significantly with aging and gradual deterioration, due to changes in leakage paths or emission characteristics as they are affected by high voltage. Only limited shielding is afforded by the tube envelope. Additional X-ray shielding must be provided on all sides of the tube to provide adequate protection to operating personnel throughout the tube's life. When this tube is used as a pulse modulator, shielding of the pulse transformer may also be necessary. X-ray caution signs or labels must be permanently attached to equipment using this tube directing operating personnel never to operate this device without X-ray shielding in place.

RADIO FREQUENCY RADIATION — Exposure of the human body to rf radiation becomes increasingly more hazardous as the power level and/or frequency are increased. Exposure to high-power rf radiation must be strictly prevented at any frequency.

Equipment must be designed to fully safeguard all personnel from these hazards. Labels and caution notices must be provided on equipment and in manuals clearly warning of these hazards.

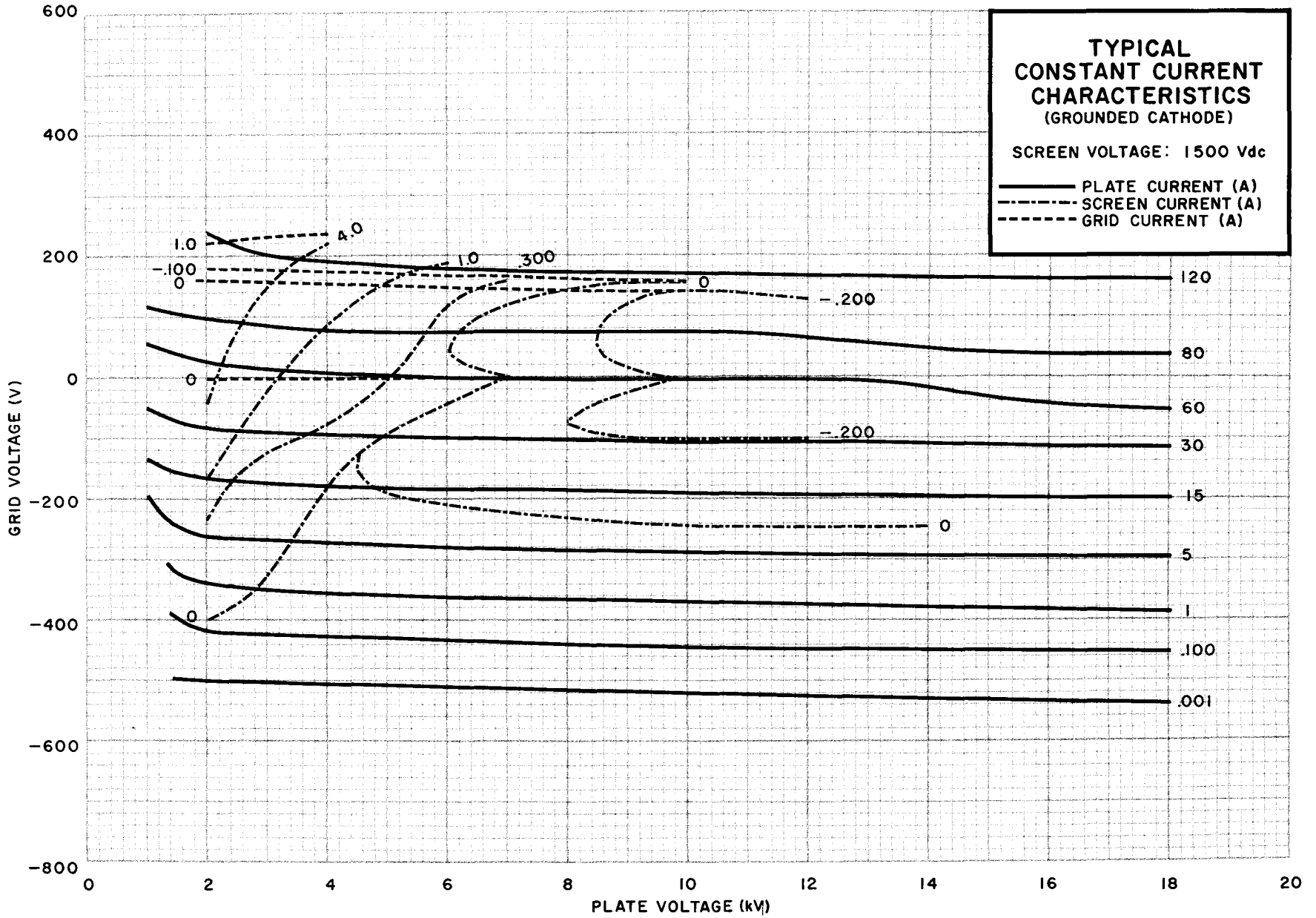

4074

4CW100,000E

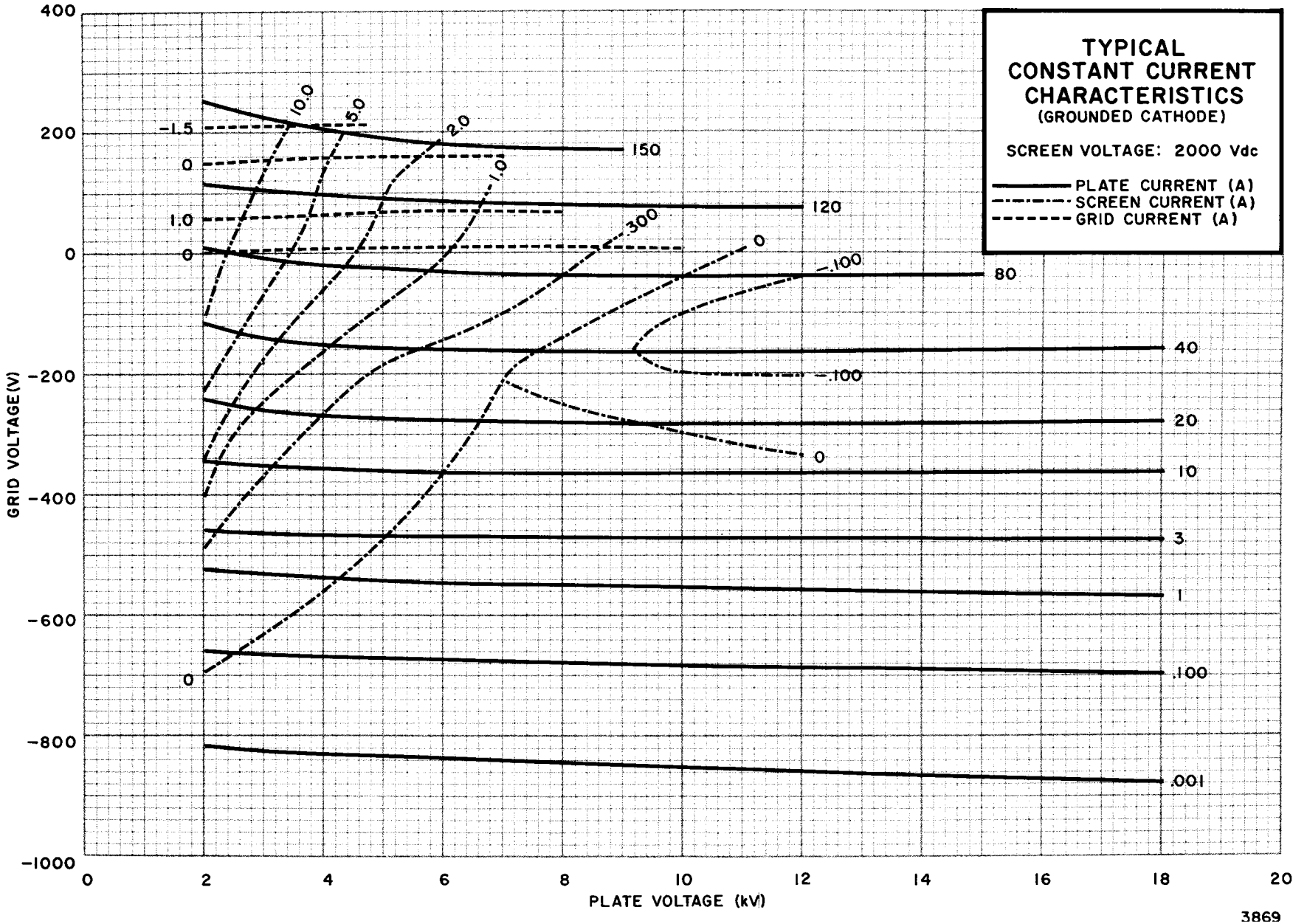
TYPICAL
CONSTANT CURRENT
CHARACTERISTICS
(GROUNDED CATHODE)
SCREEN VOLTAGE: 2000 Vdc
PLATE CURRENT (A)
SCREEN CURRENT (A)
GRID CURRENT (A)
GRID VOLTAGE (V)
PLATE VOLTAGE (kV)
400
200
0
-200
-400
-600
-800
-1000
0
2
4
6
8
10
12
14
16
18
20
150
120
80
40
20
10
3
1
.100
.001
-1.5
0
1.0
0
0
10.0
5.0
2.0
1.0
.300
0
-.100
-.100
0
3869

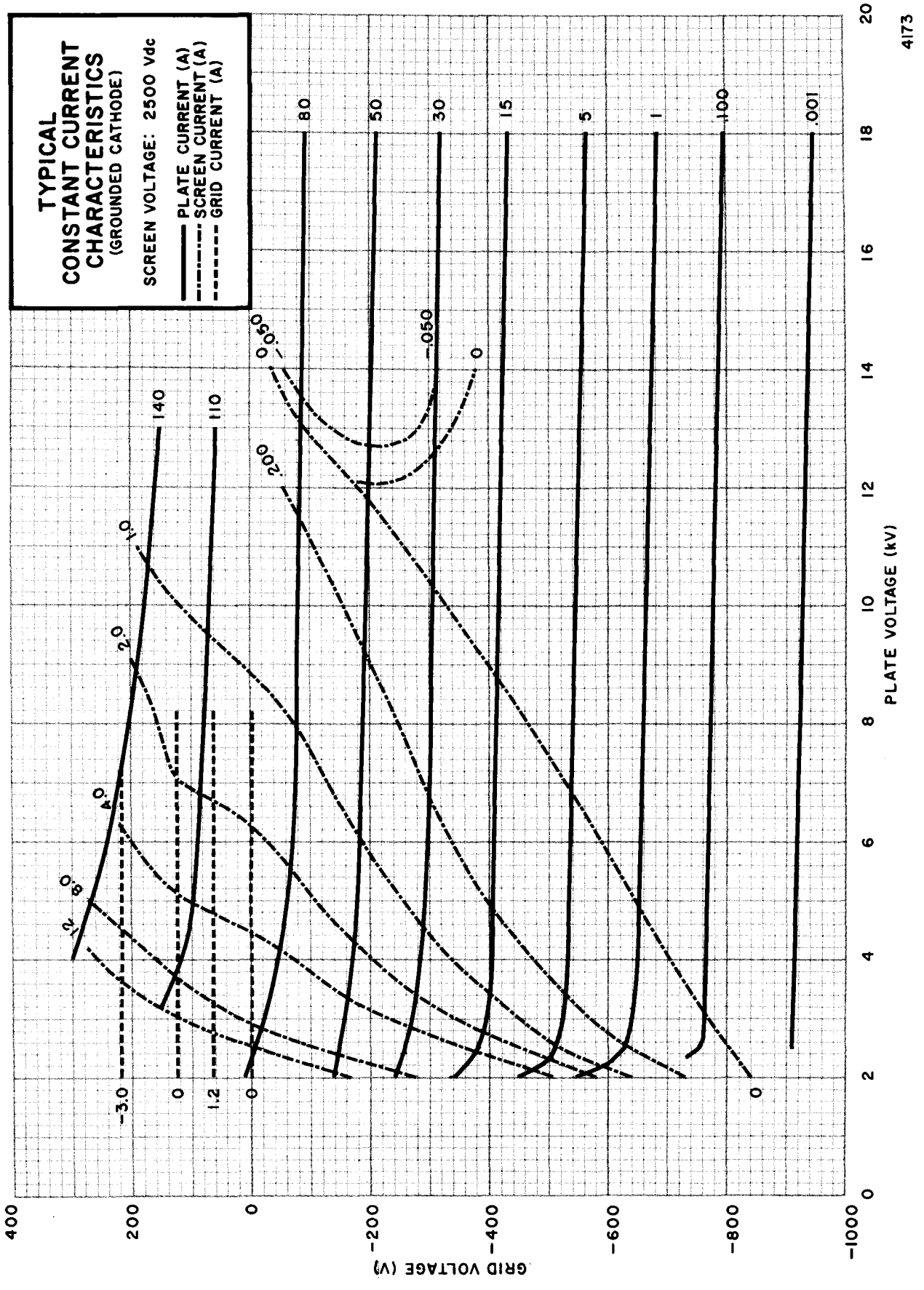
TYPICAL
CONSTANT CURRENT
CHARACTERISTICS
(GROUNDED CATHODE)
SCREEN VOLTAGE: 2500 Vdc
PLATE CURRENT (A)
SCREEN CURRENT (A)
GRID CURRENT (A)
PLATE VOLTAGE (kV)
GRID VOLTAGE (V)
4173

OUTLINE DRAWING

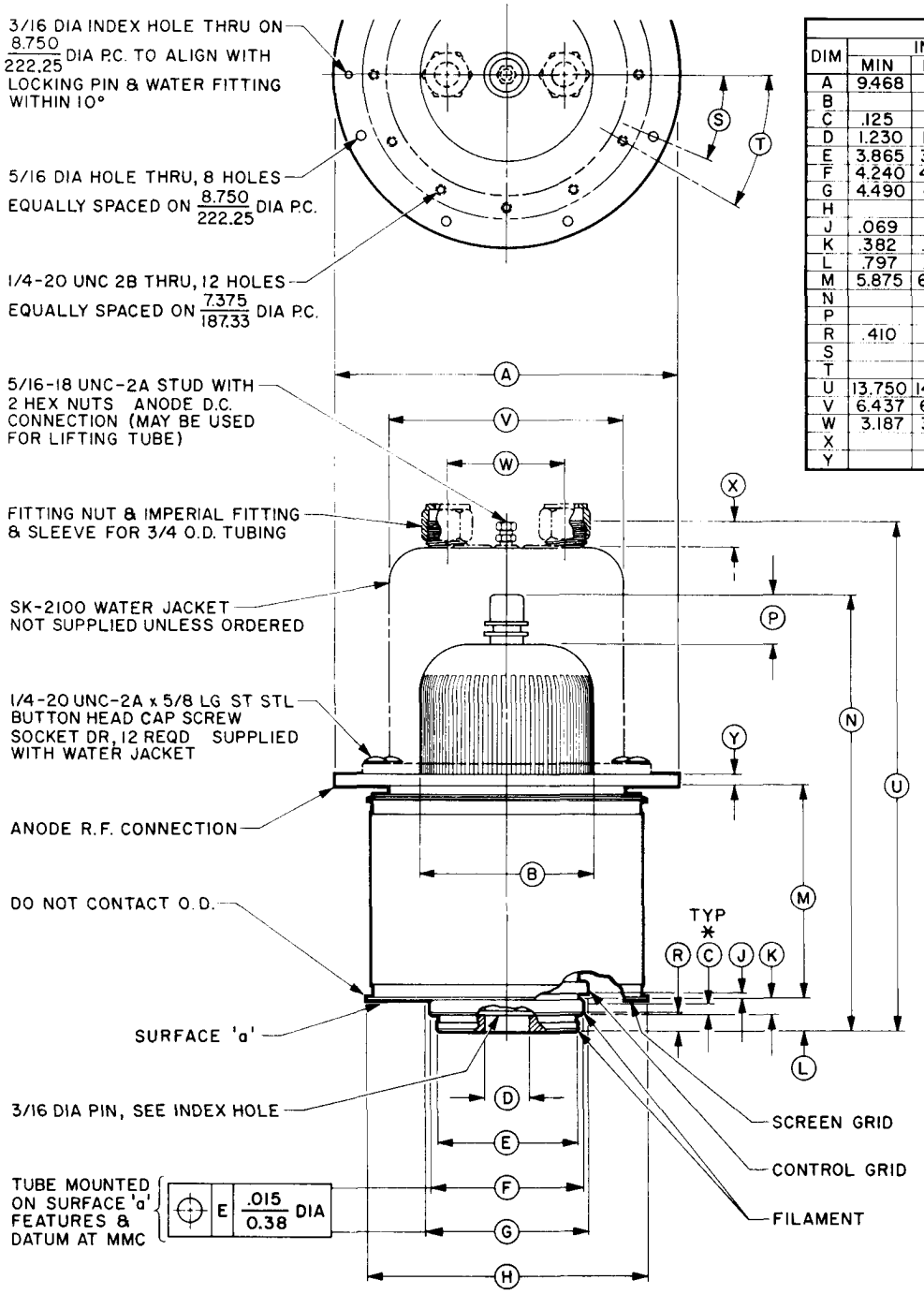

DIMENSIONAL DATA						
DIM	INCHES			MILLIMETERS		
	MIN	MAX	REF	MIN	MAX	REF
A	9.468	9.531		240.49	242.09	
B			5.000			127
C	.125			3.18		
D	1.230	1.270		31.24	32.26	
E	3.865	3.885		98.17	98.68	
F	4.240	4.260		107.7	108.2	
G	4.490	4.510		114.05	114.55	
H			7.750			196.85
J	.069	.149		1.75	3.79	
K	.382	.462		9.70	11.74	
L	.797	.922		20.24	23.42	
M	5.875	6.000		149.23	152.6	
N			11.500			292.1
P			1.375			34.93
R	.410	.475		10.41	12.07	
S			22 1/2°			—
T			30°			—
U	13.750	14.250		349.25	361.95	
V	6.437	6.562		163.7	166.88	
W	3.187	3.313		80.95	84.15	
X			.562			14.28
Y			.312			7.93

REF DIMENSIONS ARE FOR INFORMATION ONLY
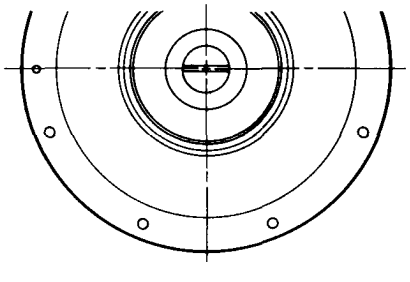
(✱) MINIMUM CONTACT SURFACE