4CV8000A

TECHNICAL DATA

VAPOR-COOLED
RADIAL-BEAM
POWER-TETRODE

The EIMAC 4CV8000A is a ceramic/metal vapor-cooled power tetrode designed to be used as a Class-AB1 linear amplifier in audio or radio-frequency applications. Its characteristic of low intermodulation distortion makes it specially suitable for single-sideband service. The vapor-cooled anode has a dissipation rating of 8000 watts when mounted in an EIMAC BR-101 broiler.

The 4CV8000A is also recommended for Class-C radio-frequency power amplifier and plate-modulated radio-frequency power amplifier service.

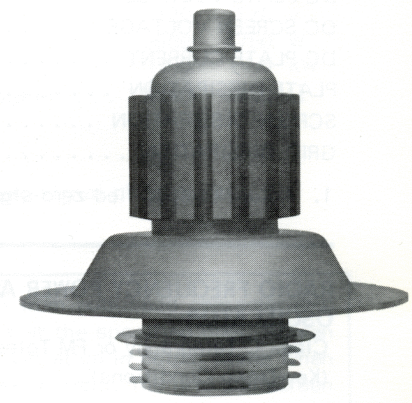

GENERAL CHARACTERISTICS[1]

Filament: Thoriated Tungsten	
Voltage	9.0 ± 0.45 V
Current, at 9.0 volts	41.5 A
Amplification Factor (Average):	
Grid to Screen	5.5
Direct Interelectrode Capacitance (grounded cathode)[2]	
Cin	130 pF
Cout	12.5 pF
Cpk	1.0 pF
Frequency of Maximum Rating:	
CW	150 MHz

1. Characteristics and operating values are based upon performance tests. These figures may change without notice as the result of additional data or product refinement. EIMAC Division of Varian should be consulted before using this information for final equipment design.

2. Capacitance values are for a cold tube as measured in a special shielded fixture in accorcance with Electronic Industries Association Standard RS-191.

MECHANICAL

Maximum Overall Dimensions:	
Length	7.98 in; 202.69 mm
Diameter	7.87 in; 199.90 mm
Net Weight	7.0 lb; 3.2 kg
Operating Position	Axis vertical, base up
Maximum Operating Temperature:	
Ceramic/Metal Seals	250°C
Anode Flange	110°C
Cooling	Vapor and Forced Air
Base	Special, ring and breach-block terminal surfaces
Recommended Air System Socket	SK-1490
Recommended Boiler	BR-101

(Revised 3-15-71) © by Varian

Printed in U.S.A.

RADIO FREQUENCY LINEAR AMPLIFIER GRID DRIVEN, Class AB1

ABSOLUTE MAXIMUM RATINGS

DC PLATE VOLTAGE	7000	VOLTS
DC SCREEN VOLTAGE	1000	VOLTS
DC PLATE CURRENT	2.0	AMPERES
PLATE DISSIPATION	8000	WATTS
SCREEN DISSIPATION	175	WATTS
GRID DISSIPATION	50	WATTS

1. Adjust to specified zero-signal dc plate current.

TYPICAL OPERATION (Frequencies to 30 MHz)
Class AB_1, Grid Driven, Peak Envelope or Modulation Crest Conditions.

Plate Voltage	5000	6000	Vdc
Screen Voltage	850	850	Vdc
Grid Voltage [1]	-130	-135	Vdc
Zero-Signal Plate Current	1.0	1.0	Adc
Single-Tone Plate Current	1.95	2.0	Adc
Single-Tone Screen Current [2]	130	125	mAdc
Peak rf Grid Voltage [2]	120	125	v
Plate Dissipation	3650	4750	W
Plate Output Power	6000	7250	W
Resonant Load Impedance	2170	1825	Ω

2. Approximate value .

RADIO FREQUENCY POWER AMPLIFIER OR OSCILLATOR

Class C Telegraphy or FM Telephony
(Key-Down Conditions)

ABSOLUTE MAXIMUM RATINGS

DC PLATE VOLTAGE	7000	VOLTS
DC SCREEN VOLTAGE	1000	VOLTS
DC PLATE CURRENT	2.0	AMPERES
PLATE DISSIPATION	8000	WATTS
SCREEN DISSIPATION	175	WATTS
GRID DISSIPATION	50	WATTS

TYPICAL OPERATION (Frequencies to 30 MHz)

Plate Voltage	6000	7000	Vdc
Screen Voltage	500	500	Vdc
Grid Voltage	-240	-265	Vdc
Plate Current	1.95	1.90	Adc
Screen Current [1]	315	295	mAdc
Grid Current [1]	135	125	mAdc
Peak rf Grid Voltage [1]	345	370	v
Calculated Driving Power	47	47	W
Plate Output Power	9.2	11.0	kW

1. Approximate value.

PLATE MODULATED RADIO FREQUENCY POWER AMPLIFIER-GRID DRIVEN

Class C Telephony (Carrier Conditions)

ABSOLUTE MAXIMUM RATINGS

DC PLATE VOLTAGE	5000	VOLTS
DC SCREEN VOLTAGE	600	VOLTS
DC PLATE CURRENT	1.4	AMPERES
PLATE DISSIPATION [1]	5500	WATTS
SCREEN DISSIPATION [2]	175	WATTS
GRID DISSIPATION [2]	50	WATTS

1. Corresponds to 8000 watts at 100% sine-wave modulation.
2. Average, with or without modulation.

TYPICAL OPERATION (Frequencies to 30 MHz)

Plate Voltage	4000	5000	Vdc
Screen Voltage	400	400	Vdc
Grid Voltage	-250	-250	Vdc
Plate Current	1.4	1.35	Adc
Screen Current [1]	225	235	mAdc
Grid Current [1]	115	125	mAdc
Peak af Screen Voltage [1] (100% modulation)	365	365	v
Peak rf Grid Voltage [1]	335	330	v
Calculated Driving Power	39	42	W
Plate Dissipation	1200	1250	W
Plate Output Power	4400	5500	W

1. Approximate value.

AUDIO FREQUENCY POWER AMPLIFIER OR MODULATOR

Class AB , Grid Driven (Sinusoidal Wave)

ABSOLUTE MAXIMUM RATINGS (per tube)

DC PLATE VOLTAGE	7000	VOLTS
DC SCREEN VOLTAGE	1000	VOLTS
DC PLATE CURRENT	2.0	AMPERES
PLATE DISSIPATION	8000	WATTS
SCREEN DISSIPATION	175	WATTS
GRID DISSIPATION	50	WATTS

TYPICAL OPERATION (Two Tubes)

Plate Voltage	5000	6000	Vdc
Screen Voltage	850	850	Vdc
Grid Voltage [1/3]	-130	-135	Vdc
Zero-Signal Plate Current	2.0	2.0	Adc
Max. Signal Plate Current	3.9	4.0	Adc
Max. Signal Screen Current[1]	260	250	mAdc
Peak af Grid Voltage[2]	120	125	v
Max. Signal Plate Dissipation[2]	3650	4750	W
Plate Output Power	12.0	14.5	kW
Load Resistance (plate to plate)	4340	3650	Ω

1. Approximate value.
2. Per Tube.
3. Adjust to give stated zero-signal plate current.

NOTE: TYPICAL OPERATION data are obtained direct measurement or by calculation from published characteristic curves. Adjustment of the rf grid voltage to obtain the specified plate current at the specified bias, screen and plate voltage is assumed. If this procedure is followed, there will be little variation in output power when the tube is changed, even though there may be some variation in grid and screen current. The grid and screen currents which result when the desired plate current is obtained are incidental and vary from tube to tube. These current variations cause no difficulty so long as the circuit maintains the correct voltage in the presence of the variations in current. In Class C service, if grid bias is obtained principally by means of a grid resistor, the resistor must be adjustable to obtain the required bias voltage when the correct rf grid voltage is applied.

RANGE VALUES FOR EQUIPMENT DESIGN

	Min.	Max.	
Heater: Current at 9.0 volts	39.5	43.5	A
Interelectrode Capacitances[1] (grounded cathode connection)			
Cin	120	140	pF
Cout	10.5	14.5	pF
Cgp	---	1.4	pF

1. Capacitance values are for a cold tube as measured in a special shielded fixture in accordance with Electronic Industries Association Standard RS-191.

APPLICATION

MECHANICAL

MOUNTING - The 4CV8000A must be operated with its axis vertical, base up in an EIMAC BR-101 boiler. Care must be exercised when installing to insure that the boiler is level, the water is at the proper level and that the flange of the tube makes a vapor tight seal against the rubber "0" ring and boiler. A typical vapor cooling system is shown in this data sheet.

SOCKET - The EIMAC SK-1490 socket is available for use with the 4CV8000A. Filament, control-grid, and screen-grid connections are made to this socket.

COOLING - Cooling is accomplished by immersing the anode in the distilled water filled BR-101 boiler. The energy dissipated at the anode causes the water to boil at the surfaces of the anode, be converted into steam and be carried away to the condenser. The boiling action keeps the anode surfaces at approximately 100°C. In a properly designed boiler-tube system (such as the 4CV8000A and BR-101), it is extremely unlikely that the anode surfaces will ever exceed 110°C - well below the 250°C maximum rating - at full dissipation ratings.

The water in the boiler must be maintained at

a constant level, just below the top of the fins on the anode cooler. This is accomplished automatically in the vapor cooling system shown. Condensate from the condenser is returned to the boiler to maintain this constant fluid level. Any decrease in liquid level is sensed by the control box, CB-102. A low water level in the control box activates the solenoid water valve, allowing make-up water from the reservoir to enter the boiler. When the proper level is reached, the control box de-energizes the solenoid, stopping the flow from the reservoir. A second switch in the control box is energized if the water level drops to a lower level because of an empty reservoir or a constriction in the line. This switch may be used to shut down the equipment or activate an alarm.

For reliable operation, it is important that the control box and boiler be mounted so that the level sensed by the control box is exactly the same as the level in the boiler.

Cooling of the tube base is accomplished by blowing 25-50 CFM of air through the socket from the sides.

ELECTRICAL

HIGH VOLTAGE - Normal operating voltages used with the 4CV8000A are deadly, and the equipment must be designed properly and operating precautions must be followed. Design all equipment so that no one can come in contact with high voltages. All equipment must include safety enclosures for high-voltage circuits and terminals, with interlock switches to open primary circuits of the power supply and to discharge high-voltage condensers whenever access doors are opened. Interlock switches must not be bypassed or "cheated" to allow operation with access doors open. Always remember that HIGH VOLTAGE CAN KILL.

FILAMENT OPERATION - The rated filament voltage for the 4CV8000A is 9.0 volts. Filament voltage, as measured at the socket, must be maintained at 9.0 volts plus or minus five percent to obtain maximum tube life. The use of a constant voltage filament transformer is recommended.

GRID OPERATION - The 4CV8000A grid has a maximum dissipation rating of 50 watts. Precautions should be observed to avoid exceeding this rating. Grid dissipation is the product of the dc grid current and the peak positive grid voltage swing.

SCREEN OPERATION - The power dissipated by the screen must not exceed 175 watts. Screen dissipation, in cases where no ac is applied to the screen, is the product of screen voltage and screen current. If the screen voltage is modulated, the screen dissipation will depend upon loading, driving power and screen voltage.

Screen dissipation is likely to rise to excessive values when the plate voltage, bias voltage or plate load are removed with filament and screen voltages applied. Suitable protective means must be provided to limit the screen dissipation in the event of these failures.

PLATE DISSIPATION - The plate dissipation rating of 8000 watts attainable through vapor cooling provides a large margin of safety. It is unlikely that this rating will be exceeded, even during tuning periods.

When the 4CV8000A is used as a plate-modulated rf amplifier, this rating is reduced to 5500 watts with a reduced plate input rating of 5000 volts and 1.4 amps.

SPECIAL APPLICATIONS - If it is desired to operate this tube under conditions widely different from those given here, write to Power Grid Tube Division, EIMAC Division of Varian, 301 Industrial Way, San Carlos, California 94070, for information and recommendations.

VAPOR COOLING SYSTEM

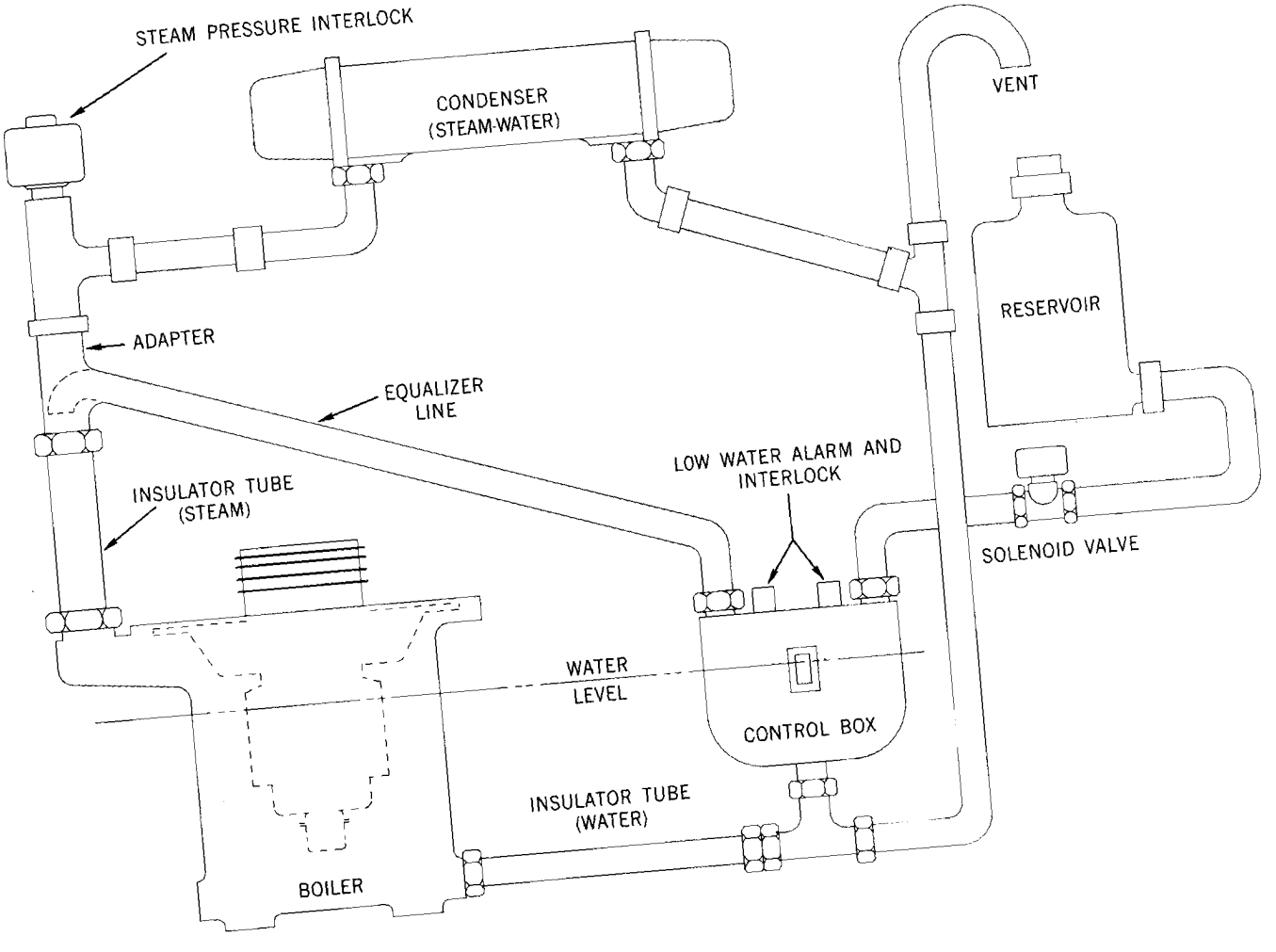

DIMENSIONAL DATA						
DIM.	INCHES			MILLIMETERS		
	MIN.	MAX.	REF.	MIN.	MAX.	REF.
A	3.475	3.525		88.27	89.53	- -
B	0.860	0.890		21.84	22.61	- -
C	2.985	3.025		75.82	76.84	- -
D	3.490	3.525		88.65	89.54	- -
E	3.472	3.602		88.19	91.49	- -
F	6.000	6.200		152.40	157.48	- -
G	7.753	7.983		196.93	202.77	- -
H	0.965	1.005		24.51	25.53	- -
K	0.700	0.730		17.78	18.54	- -
L	0.430	0.460		10.92	11.68	- -
M	0.160	0.180		4.06	4.57	- -
N	0.018	0.025		0.46	0.64	- -
P	1.050	1.100		26.67	27.94	- -
R	39°	41°		39°	41°	- -
S	89°	91°		89°	91°	- -
T	0.485	0.515		12.32	13.08	- -
U	1.557	1.567		39.55	39.80	- -
V	4.000	4.175		101.60	106.05	- -
W	- -	- -	2.968	- -	- -	75.39
X	- -	- -	7.875	- -	- -	200.03
Y	- -	- -	0.344	- -	- -	8.74
Z	1.785	1.915	- -	45.34	48.64	- -

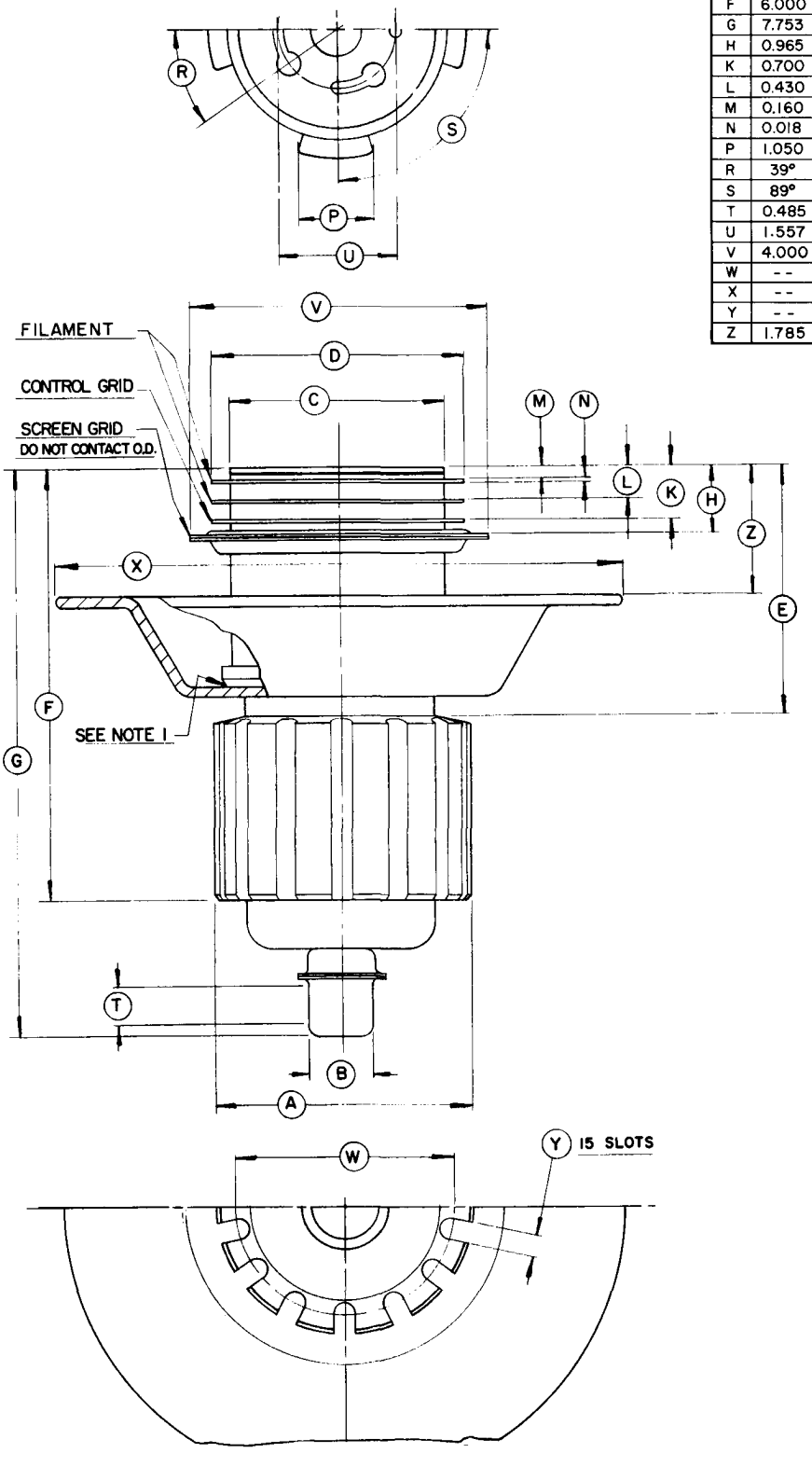

NOTES:
1. AREA FOR MEASURING ANODE FLANGE TEMPERATURE.
2. REFERENCE DIMENSIONS ARE FOR INFORMATION ONLY & ARE NOT REQ'D FOR INSPECTION PURPOSES.

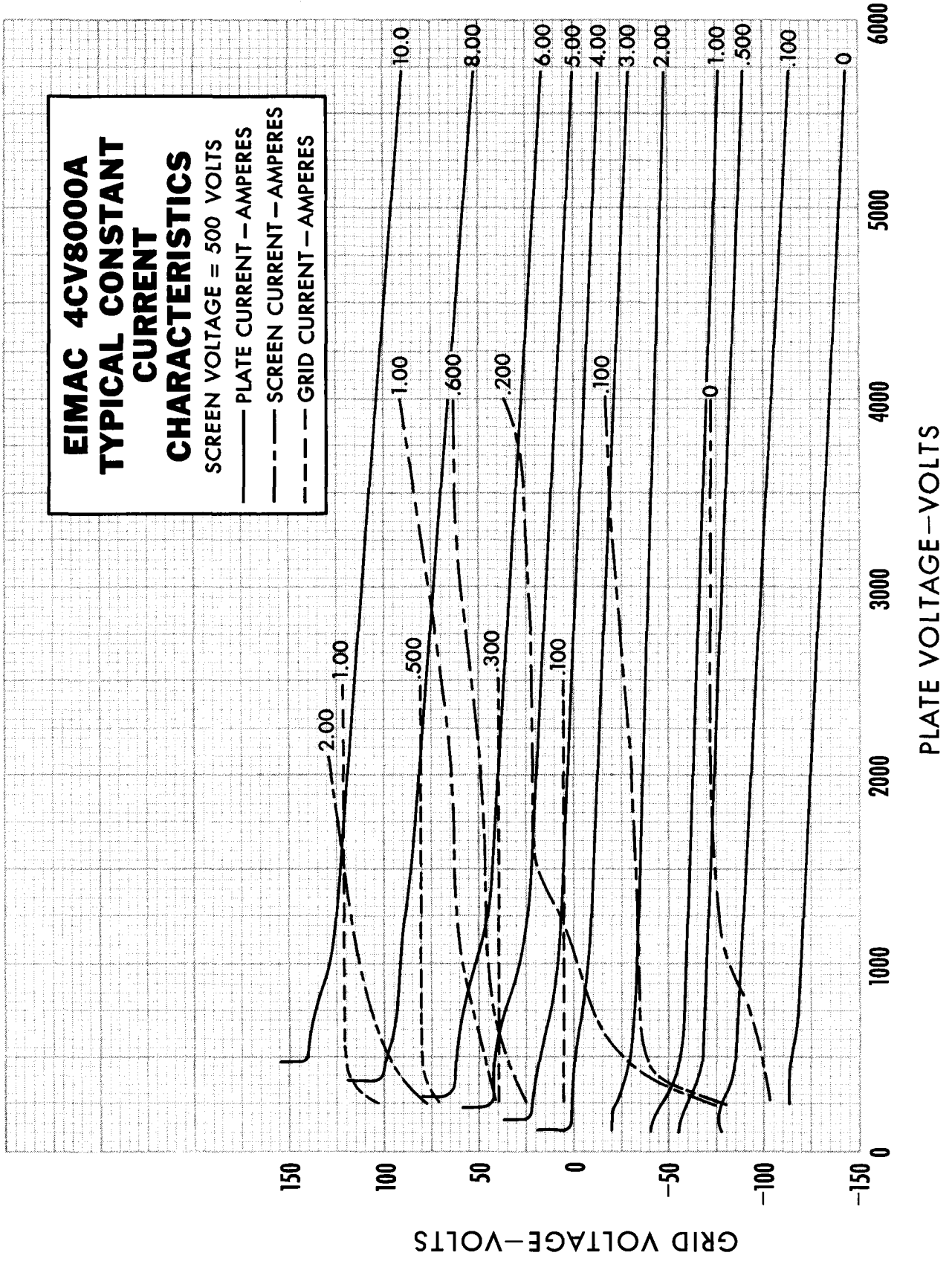
EIMAC 4CV8000A
TYPICAL CONSTANT
CURRENT
CHARACTERISTICS
SCREEN VOLTAGE = 500 VOLTS
PLATE CURRENT—AMPERES
SCREEN CURRENT—AMPERES
GRID CURRENT—AMPERES
10.0
8.00
6.00
5.00
4.00
3.00
2.00
1.00
.500
.100
0
1.00
.600
.200
.100
0
2.00
1.00
.500
.300
.100
GRID VOLTAGE—VOLTS
150
100
50
0
-50
-100
-150
PLATE VOLTAGE—VOLTS
0
1000
2000
3000
4000
5000
6000

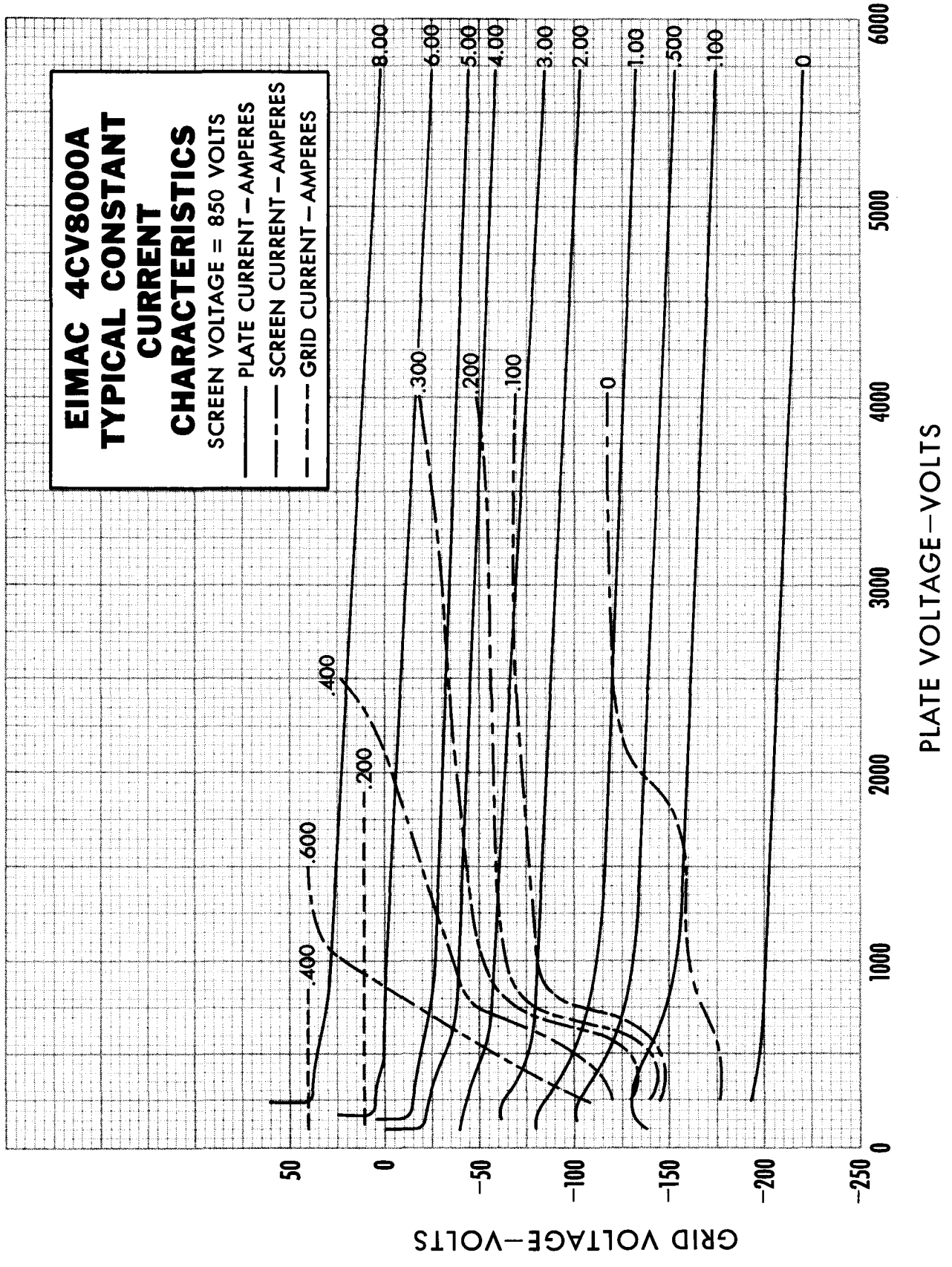
EIMAC 4CV8000A
TYPICAL CONSTANT
CURRENT
CHARACTERISTICS
SCREEN VOLTAGE = 850 VOLTS
PLATE CURRENT—AMPERES
SCREEN CURRENT—AMPERES
GRID CURRENT—AMPERES
8.00
6.00
5.00
4.00
3.00
2.00
1.00
.500
.100
0
.300
.200
.100
0
.400
.200
.600
.400
50
0
-50
-100
-150
-200
-250
0
1000
2000
3000
4000
5000
6000
PLATE VOLTAGE—VOLTS
GRID VOLTAGE—VOLTS