4CV50,000J

TECHNICAL DATA

VAPOR COOLED
POWER TETRODE

The EIMAC 4CV50,000J is a ceramic/metal, vapor-cooled power tetrode intended for use at the 50 to 100 kilowatt output power level. This tube is characterized by low input and feedback capacitances and low internal lead inductances. A rugged mesh thoriated tungsten filament provides adequate emission over the long operating life. It is recommended for use as a class AB_1 rf linear amplifier. The vapor cooled anode is rated at 50 kilowatts dissipation.

GENERAL CHARACTERISTICS[1]

ELECTRICAL

Filament: Mesh Thoriated Tungsten	
Voltage	12 ± 0.6 V
Current, at 12.0 volts	220 A
Amplification Factor (Average)	
Grid to Screen	4.5
Direct Interelectrode Capacitances (grounded cathode)	
Cin	310 pF
Cout	48 pF
Cgp	1.0 pF
Frequency of Maximum Rating:	
CW	110 MHz

1. Characteristics and operating values are based upon performance tests. These figures may change without notice as the result of additional data or product refinement. EIMAC Division of Varian should be consulted before using this information for final equipment design.

MECHANICAL

Overall Dimensions:	
Length (less boiler)	11.500 in; 292.1 mm
Diameter	9.531 in; 241.0 mm
Net Weight (less boiler)	31.5 lb; 14.3 kg
Operating Position	Vertical, base down
Maximum Operating Temperature:	
Ceramic/Metal Seals and terminals	250°C
Cooling	Vapor and Forced Air
Base	Special
Recommended Air System Socket	EIMAC SK-2000 Series
Recommended Boiler	EIMAC BR-710, 720

(Effective 7-15-71) © 1971 by Varian Printed in U.S.A.

RADIO FREQUENCY LINEAR AMPLIFIER
GRID DRIVEN Class AB

ABSOLUTE MAXIMUM RATINGS:

DC PLATE VOLTAGE	17,500	VOLTS
DC SCREEN VOLTAGE	2,500	VOLTS
DC PLATE CURRENT	12.0	AMPERES
PLATE DISSIPATION	50,000	WATTS
SCREEN DISSIPATION	1,500	WATTS
GRID DISSIPATION	400	WATTS

1. Adjust to specified zero-signal dc plate current.
2. Approximate value.
3. The IMD products are referenced against one tone of a two-equal tone signal.

TYPICAL OPERATION (Frequencies to 30 MHz)
Class AB_1, Grid Driven Peak Envelope or Modulation Crest Conditions

Plate Voltage	8.3	kVdc
Screen Voltage	1.5	kVdc
Grid Voltage 1	-250	Vdc
Zero-Signal Plate Current	3.6	Adc
Single-Tone Plate Current	9.8	Adc
Peak rf Grid Voltage 2	250	v
Resonant Load Impedance	413	Ω
Plate Dissipation	35	kW
Plate Output Power	45	kW
Intermod. Distortion Products 3		
3rd Order	-46	dB
5th Order	-60	dB

NOTE: TYPICAL OPERATION data are obtained from direct measurement or by calculation from published characteristic curves. Adjustment of the rf grid voltage to obtain the specified plate current at the specified bias, screen and plate voltages is assumed. If this procedure is followed, there will be little variation in output power when the tube is changed, even though there may be some variation in grid and screen current. The grid and screen currents which result when the desired plate current is obtained are incidental and vary from tube to tube. These current variations cause no difficulty so long as the circuit maintains the correct voltage in the presence of the variations in current.

RANGE VALUES FOR EQUIPMENT DESIGN	Min.	Max.	
Heater: Current at 12.0 volts	200	230	A
Interelectrode Capacitances (grounded cathode connection)			
Cin	290	330	pF
Cout	42.0	53.0	pF
Cgp	---	1.5	pF
Interelectrode Capacitances (grounded grid connection)			
Cin	113	137	pF
Cout	45.0	55.0	pF
Cgk	---	0.5	pF

APPLICATION

MECHANICAL

MOUNTING - The 4CV50,000J must be operated with its axis vertical. The base of the tube must be down.

SOCKET - The EIMAC sockets type SK-2000 series are recommended for use with the 4CV-50,000J.

COOLING - Cooling is accomplished by immersing the anode in the distilled water filled EIMAC boiler. The energy dissipated at the anode causes the water to boil at the surfaces of the anode, to be converted into steam and be carried away to the condenser. The boiling action keeps the anode surfaces at approximately 100°C. In a properly designed boiler-tube system, it is extremely unlikely that the anode surfaces will ever exceed 110°C at full dissipation ratings.

The water in the boiler must be maintained at a constant level which may be accomplished automatically in an EIMAC vapor cooling system. Condensate from the condenser is returned to the boiler to maintain a constant coolant level. Any losses or drops in coolant level are sensed and makeup water enters the boiler from the reservoir. When the proper level is reached the flow from the reservoir is stopped automatically. A switch is energized when the reservoir water level drops to a low level. This switch may be used to shut down the equipment or activate an alarm.

Air cooling of the tube base is required whenever filament voltage is applied. A minimum air

flow of 100 cfm should be ducted toward the center of the EIMAC SK-2000 socket from a blower or fan. Pressure drop through the SK-2000 socket is approximately 0.5 inches of water. The air system must be capable of supplying 100 cfm into this head.

The water used as a coolant in the vapor phase cooling system is continuously distilled. It is imperative that the resistivity of the water be maintained above 200,000 ohms/cm . The entry of any contaminator to the system must be prevented. The use of any lead bearing alloys such as brass or soft/solder in fabrication of the cooling system must be avoided since steam leaches out the lead, contaminating the coolant.

Suitable materials for a cooling system are copper, hard solder, and polypropylene. Any contamination of the water causes leakage current to flow through the water supply lines to ground. When the resistivity is low this leakage current power will cause boiling in the lines, interfering with the proper operation of the system.

The user must be prepared to flush the system on initial startup to purge any contamination which may have entered the components during shipment or assembly.

ELECTRICAL

FILAMENT OPERATION - Filament voltage should be measured at the socket with a 1 percent rms responding meter. The peak emission at rated filament voltage of the EIMAC 4CV-50,000J is normally many times the peak emission required for communication service. A small decrease in filament temperature due to reduction of filament voltage can increase the life of the 4CV50,000J by a substantial percentage. It is good practice to determine the nominal filament voltage for a particular application that will not adversely affect equipment operation. This is done by measuring some important parameter of performance such as plate current, power output, or distortion while filament voltage is reduced on the 4CV50,000J. At some point in filament voltage there will be noticeable reduction in plate current, or power output, or an increase in distortion. Operation must be at a filament voltage slightly higher than the point at which performance appears to deteriorate. This point should be periodically checked to maintain proper operation.

GRID OPERATION - The 4CV50,000J control grid is rated at 400 watts of dissipation. Grid dissipation is the approximate product of grid current and peak positive grid voltage.

SCREEN OPERATION - The power dissipated by the screen grid must not exceed 1500 watts. Where no ac is applied to the screen, dissipation is the product of dc screen voltage and dc screen current. With screen modulation the dissipation is dependent on rms screen voltage and rms screen current. Plate voltage, plate load or bias voltage must never be removed while filament and screen voltages are present since the screen dissipation rating will be exceeded. Suitable protective means must be provided to prevent any of these conditions.

The 4CV50,000J may exhibit reversed screen current to a greater or lesser degree depending on operating conditions. The screen supply voltage must be maintained constant for any values of negative and positive screen current which may be encountered. Dangerously high plate current may flow if the screen power supply exhibits a rising voltage characteristic with negative screen current. Stabilization may be accomplished with a bleeder resistor connected from screen to cathode, or an electron-tube regulator circuit may be employed in the screen supply. It is absolutely essential to use a bleeder if a series electron-tube regulator is employed.

PLATE DISSIPATION - The plate dissipation of 50 kilowatts attainable through vapor cooling provides a large margin of safety in most applications. The rating may be exceeded for brief periods during tuning. When the 4CV50,000J is used as a plate-modulated rf amplifier, plate dissipation under carrier conditions is limited to 33,300 watts.

HIGH VOLTAGE - Normal operating voltages used with the 4CV50,000J are deadly, and the equipment must be designed properly and operating precautions must be followed. Design all equipment so that no one can come in contact with high voltages. All equipment must include safety enclosures for high-voltage circuits and terminals, with interlock switches to open primary circuits of the power supply and to discharge high-voltage condensers whenever access doors are opened. Interlock switches must not be bypassed or "cheated" to allow operation with access doors open. Always remember that HIGH VOLTAGE CAN KILL.

X-RADIATION - High-vacuum tubes operating at voltages higher than 10 kilovolts produce progressively more dangerous X-ray radiation as the voltage is increased. The 4CV50,000J, operating at its rated voltages and currents, is a potential

X-ray hazard. Only limited shielding is afforded by the tube envelope. Moreover, the X-ray radiation level can increase significantly with aging and gradual deterioration, due to leakage paths or emission characteristics as they are affected by the high voltage. X-ray shielding must be provided on all sides of tubes operating at these voltages to provide adequate protection throughout the tube's life. Periodic checks on the X-ray level should be made, and the tube should never be operated without adequate shielding in place when voltages above 10 kilovolts are in use. Lead glass, which attenuates X-rays, is available for viewing windows. If there is any doubt as to the requirement for or the adequacy of shielding, an expert in this field should be contacted to perform an X-ray survey of the equipment.

Operation of high-voltage equipment with interlock switches "cheated" and cabinet doors open in order to be better able to locate an equipment malfunction can result in serious X-ray exposure.

RADIO FREQUENCY RADIATION - Avoid exposure to strong rf fields even at relatively low frequency. Absorption of rf energy by human tissue is dependent on frequency. Under 30 MHz, most of the energy will pass completely through the human body with little attenuation or heating effect. Public health agencies are concerned with the hazard, however, even at these frequencies, and it is worth noting that some commercial dielectric heating units actually operate at frequencies as low as the 13 and 27 MHz bands.

Many EIMAC power tubes, such as the 4CV-50,000J, are specifically designed to generate or amplify radio frequency power. There may be a relatively strong rf field in the general proximity of the power tube and its associated circuitry--- the more power involved, the stronger the rf field. Proper enclosure design and efficient coupling of rf energy to the load will minimize the rf field in the vicinity of the power amplifier unit itself.

FAULT PROTECTION - In addition to normal plate overcurrent interlock, screen current interlock, and coolant flow interlock, it is good practice to protect the tube from internal damage which could result from occasional plate arcing at high anode voltages.

In all cases some protective resistance, 5 ohms to 25 ohms, should be used in series with the tube anode to absorb power supply stored energy in case a plate arc should occur. If power supply stored energy exceeds 750 watt seconds, some form of electronic crowbar which will discharge power supply capacitors in a few microseconds following indication of start of a plate arc is recommended.

SPECIAL APPLICATION - If it is desired to operate this tube under conditions widely different from those listed here, write to Application Engineering, Power Grid Tube Division, EIMAC Division of Varian, 301 Industrial Way, San Carlos, California 94070, for information and recommendations.

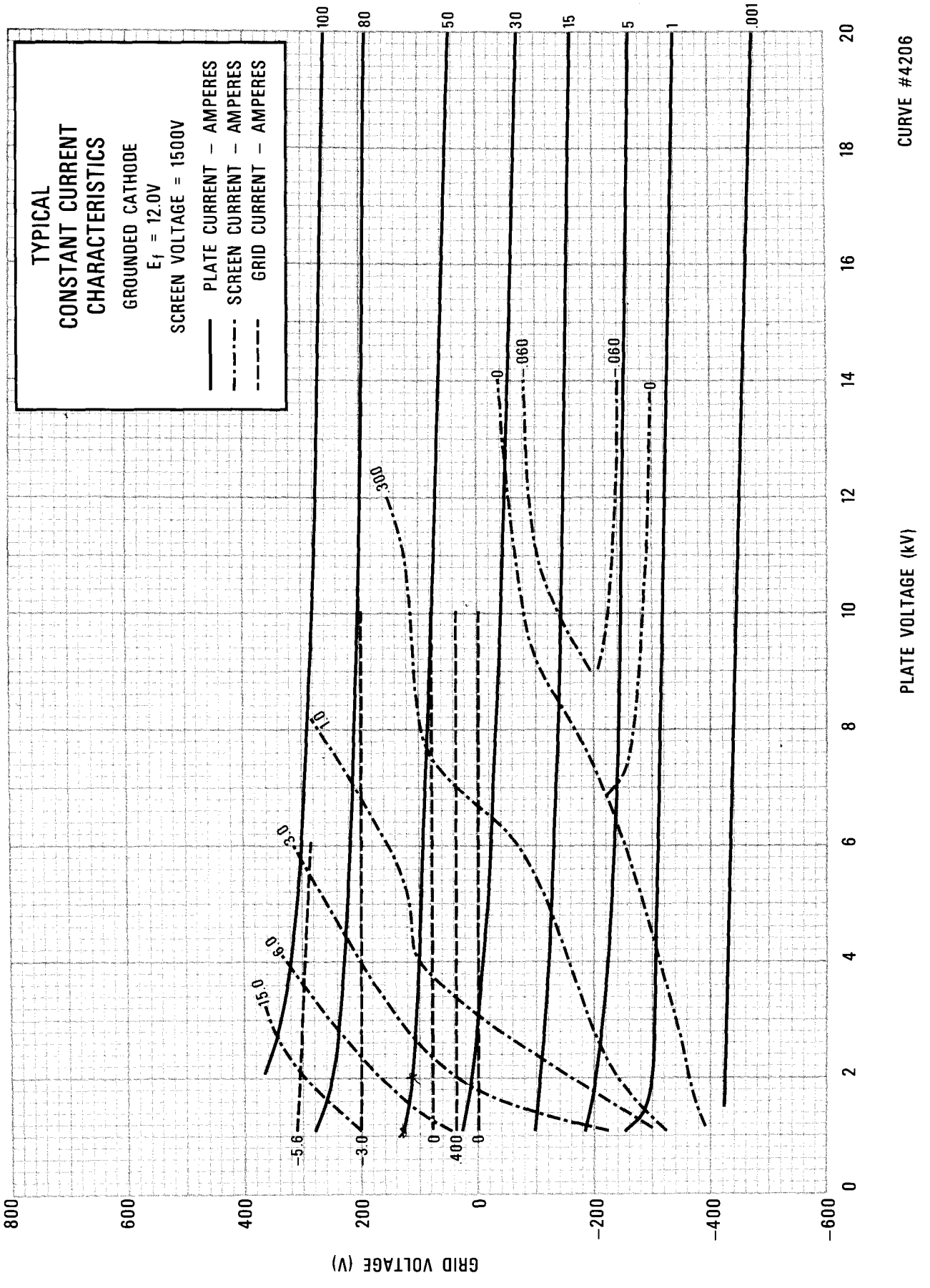
TYPICAL
CONSTANT CURRENT
CHARACTERISTICS
GROUNDED CATHODE
E_f = 12.0V
SCREEN VOLTAGE = 1500V
PLATE CURRENT – AMPERES
SCREEN CURRENT – AMPERES
GRID CURRENT – AMPERES
PLATE VOLTAGE (kV)
GRID VOLTAGE (V)
CURVE #4206

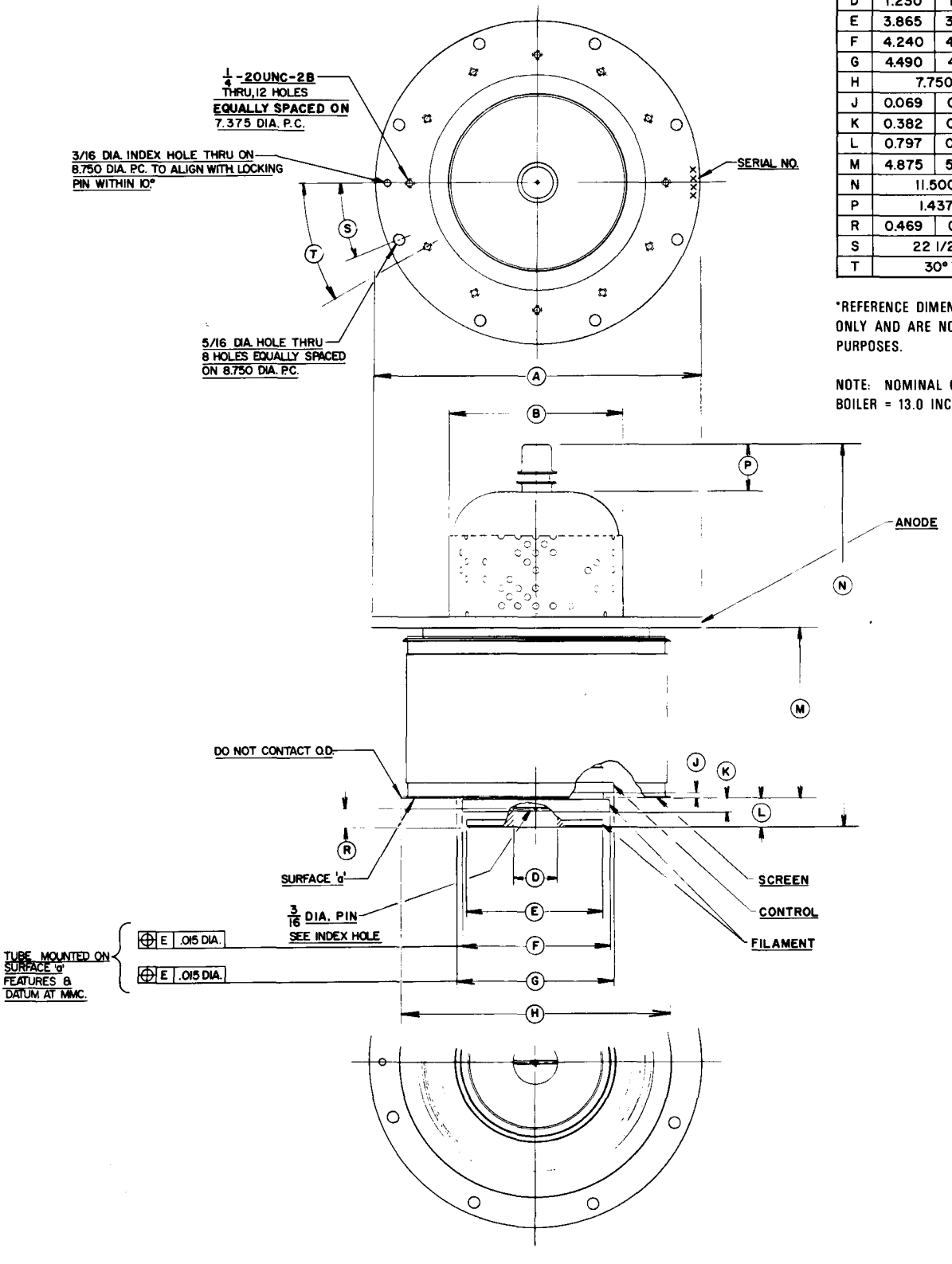

DIMENSIONAL DATA				
DIM.	INCHES		MILLIMETERS	
	MIN.	MAX.	MIN.	MAX.
A	9.468	9.531	240.49	242.09
B	5.000	5.250	127.00	133.35
C	--	--	--	--
D	1.230	1.270	31.24	32.26
E	3.865	3.885	98.17	98.68
F	4.240	4.260	107.70	108.20
G	4.490	4.510	114.05	114.55
H	7.750*		196.85*	
J	0.069	0.149	1.75	3.78
K	0.382	0.462	9.70	11.73
L	0.797	0.922	20.24	23.42
M	4.875	5.000	123.83	127.00
N	11.500*		292.10*	
P	1.437*		36.50*	
R	0.469	0.531	11.91	13.49
S	22 1/2°*		22 1/2°*	
T	30°*		30°*	

*REFERENCE DIMENSIONS ARE FOR INFORMATION ONLY AND ARE NOT REQUIRED FOR INSPECTION PURPOSES.

NOTE: NOMINAL OVERALL HEIGHT WITH BOILER = 13.0 INCHES (330.2 mm).