# 4CS250R

**TECHNICAL DATA**

**CONDUCTION COOLED RADIAL BEAM TETRODE**

The 4CS250R is a compact, conduction cooled, high perveance radial beam tetrode. It is electrically identical to the 4CX250R except that the maximum dissipation of the 4CS250R is limited only by the maximum allowable anode and ceramic/metal seal temperatures. A beryllium oxide (BeO) thermal link is brazed to the anode providing an electrically isolated, low thermal resistance path between the anode and the heat sink. Ruggedized construction allows the 4CS250R to be operated in applications where shock and/or vibration is experienced.

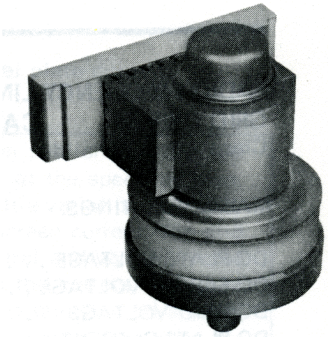

## GENERAL CHARACTERISTICS[1]

### ELECTRICAL

Cathode: Oxide Coated, Unipotential

| | |
|---|---|
| Heater: Voltage | 6.0 ± 0.3 V |
| Current, at 6.0 volts | 2.6 A |
| Cathode - Heater Potential | ±150 V |

Direct Interelectrode Capacitances (grounded cathode)[2]

| | |
|---|---|
| Input | 17 pF |
| Output[3] | 4.7 pF |
| Feedback | 0.04 pF |

Frequency of Maximum Rating:

| | |
|---|---|
| CW | 500 MHz |
| Plate or Grid-Pulsed | 500 MHz |

1. Characteristics and operating values are based upon performance tests. These figures may change without notice as the result of additional data or product refinement. EIMAC Division of Varian should be consulted before using this information for final equipment design.
2. In Shielded Fixture.
3. See output capacitance.

### MECHANICAL

Maximum Overall Dimensions:

| | |
|---|---|
| Length | 2.46 in; 62.5 mm |
| Diameter | 1.76 in; 44.9 mm |
| Net Weight | 5 oz; 141.7 gm |
| Operating Position | Any |

(Fffective 9-1-70) © by Varian Printed in U.S.A.

Maximum Operating Temperature:

| | |
|---|---|
| Ceramic/Metal Seals | 250°C |
| Anode Core | 250°C |
| Plate and Base Seals | 250°C |
| Cooling | Conduction |
| Base | Special 9-pin |
| Recommended Socket | EIMAC SK-660, SK-661 series |

## RADIO FREQUENCY LINEAR AMPLIFIER
## GRID DRIVEN CATHODE DRIVEN

Class $AB_1$

MAXIMUM RATINGS:

| | | |
|---|---|---|
| DC PLATE VOLTAGE | 2000 | VOLTS |
| DC SCREEN VOLTAGE | 500 | VOLTS |
| DC GRID VOLTAGE | -250 | VOLTS |
| DC PLATE CURRENT | 0.250 | AMPERE |
| SCREEN DISSIPATION | 12 | WATTS |
| GRID DISSIPATION | 2 | WATTS |

TYPICAL OPERATION (Frequencies to 500 MHz)
Class $AB_1$, Grid Driven, Peak Envelope or Modulation Crest Conditions

| | | | |
|---|---|---|---|
| Plate Voltage | 1500 | 2000 | Vdc |
| Screen Voltage | 350 | 400 | Vdc |
| Grid Voltage [1] | -62 | -80 | Vdc |
| Zero-Signal Plate Current | 133 | 70 | mAdc |
| Two-Tone Plate Current | 250 | 245 | mAdc |
| Two-Tone Screen Current [2] | -10 | +1 | mAdc |
| Peak rf Grid Voltage | 56 | 80 | v |
| Useful Output Power | 262 | 470 | w |
| Resonant Load Impedance | 2160 | 2840 | Ω |
| Intermodulation Distortion Products [3] | | | |
| 3rd Order | -30 | -23 | db |
| 5th Order | -35 | -27 | db |

1. Adjust to specified zero-signal dc plate current.
2. Approximate values.
3. The intermodulation distortion products are referenced against one tone of a two equal tone signal.

## RADIO FREQUENCY POWER AMPLIFIER OR OSCILLATOR

Class C Telegraphy or FM Telephony
(Key-Down Conditions)

MAXIMUM RATINGS:

| | | |
|---|---|---|
| DC PLATE VOLTAGE | 2000 | VOLTS |
| DC SCREEN VOLTAGE | 300 | VOLTS |
| DC GRID VOLTAGE | -250 | VOLTS |
| DC PLATE CURRENT | 0.250 | AMPERE |
| SCREEN DISSIPATION | 12 | WATTS |
| GRID DISSIPATION | 2 | WATTS |

TYPICAL OPERATION (Frequencies to 175 MHz)

| | | | | |
|---|---|---|---|---|
| Plate Voltage | 1000 | 1500 | 2000 | Vdc |
| Screen Voltage | 250 | 250 | 250 | Vdc |
| Grid Voltage | -90 | -90 | -90 | Vdc |
| Plate Current | 227 | 240 | 241 | mAdc |
| Screen Current [1] | 9 | 8 | 8 | mAdc |
| Grid Current [1] | 11 | 10.5 | 10.5 | mAdc |
| Peak rf Grid Voltage [1] | 104 | 104 | 104 | v |
| Calculated Driving Power [1] | 1.2 | 1.1 | 1.1 | W |
| Plate Input Power | 170 | 360 | 482 | W |
| Plate Dissipation | 17 | 91 | 103 | W |
| Plate Output Power | 153 | 269 | 379 | W |
| Resonant Load Impedance | 1833 | 2900 | 4041 | Ω |

1. Approximate value.

## PLATE MODULATED RADIO FREQUENCY POWER AMPLIFIER-GRID DRIVEN

Class C Telephony (Carrier Conditions)

MAXIMUM RATINGS:

| | | |
|---|---|---|
| DC PLATE VOLTAGE | 1500 | VOLTS |
| DC SCREEN VOLTAGE | 300 | VOLTS |
| DC GRID VOLTAGE | -250 | VOLTS |
| DC PLATE CURRENT | 0.200 | AMPERE |
| SCREEN DISSIPATION [1] | 12 | WATTS |
| GRID DISSIPATION [1] | 2 | WATTS |

1. Average, with or without modulation.

**AUDIO FREQUENCY POWER AMPLIFIER OR MODULATOR**
Class $AB_1$, Grid Driven (Sinusoidal Wave)

MAXIMUM RATINGS (Per Tube):

| | | |
|---|---|---|
| DC PLATE VOLTAGE | 2000 | VOLTS |
| DC SCREEN VOLTAGE | 500 | VOLTS |
| DC GRID VOLTAGE | -250 | VOLTS |
| DC PLATE CURRENT | 0.250 | AMPERE |
| SCREEN DISSIPATION | 12 | WATTS |
| GRID DISSIPATION | 2 | WATTS |

TYPICAL OPERATION (Two Tubes) (Push-Pull)

| | | | |
|---|---|---|---|
| Plate Voltage | 1500 | 2000 | Vdc |
| Screen Voltage | 300 | 350 | Vdc |
| Grid Voltage 1/2 | -48 | -66 | Vdc |
| Zero-Signal Plate Current | 200 | 140 | mAdc |
| Max. Signal Plate Current | 490 | 500 | mAdc |
| Zero-Signal Screen Current[1] | -2 | -4 | mAdc |
| Max. Signal Screen Current[1] | 0 | +4 | mAdc |
| Plate Output Power | 390 | 595 | W |
| Load Resistance (plate to plate) | 5920 | 8016 | Ω |

1. Approximate value.
2. Adjust to give stated zero-signal plate current.

NOTE: TYPICAL OPERATION data are obtained from direct measurement or by calculation from published characteristic curves. Adjustment of the rf grid voltage to obtain the specified plate current at the specified bias, screen and plate voltages is assumed. If this procedure is followed, there will be little variation in output power when the tube is changed, even though there may be some variation in grid and screen current. The grid and screen currents which result when the desired plate current is obtained are incidental and vary from tube to tube. These current variations cause no difficulty so long as the circuit maintains the correct voltage in the presence of the variations in current. In the case of Class C Service, if grid bias is obtained principally by means of a grid resistor, the resistor must be adjustable to obtain the required bias voltage when the correct rf grid voltage is applied.

## RANGE VALUES FOR EQUIPMENT DESIGN

| | Min. | Max. | |
|---|---|---|---|
| Heater: Current at 6.0 volts | 2.3 | 2.9 | A |
| Cathode Warmup Time | 30 | --- | sec. |
| Interelectrode Capacitances[1] (grounded cathode connection) | | | |
| Input | 16.0 | 18.5 | pF |
| Output | 4.2 | 5.2 | pF |
| Feedback | --- | 0.06 | pF |

1. In Shielded Fixture.

# APPLICATION

## MECHANICAL

*MOUNTING & SOCKETING* - The 4CS250R may be mounted in any position. EIMAC SK-660 and SK-661 socket series is recommended. The SK-660 (made of alumina) and the SK-661 (made of BeO) will allow the tube base seal heat to be effectively transferred to the heat sink. Other sockets may be used if a means for keeping the ceramic/metal base seals below 250°C is provided. The EIMAC SK-655 and ERIE 2943 and 2929 series screen by-pass capacitor are recommended for use with the 4CS250R. Figure 1 shows the recommended method of mounting the 4CS-250R to the heat sink.

When using natural convection heat sinks, Figure 2 will assist the designer in determining the minimum heat sink surface area required for the given power dissipation. The thermal and electrical characteristics of the BeO used on the 4CS250R are given in Table I and Figure 3.

A good thermally conductive compound (1) should be used in the interface to reduce the thermal resistance of this joint. In addition, the method of fastening the tube to the heat sink should provide reasonable compression to help further reduce this interface thermal resistance.

The effectiveness of any cooling system used with the 4CS250R is determined by the anode and ceramic/metal seal temperatures. These must be held below 250°C for all conditions of expected ambient temperatures and operation. These temperature parameters should be measured in the design stage using accurate thermocouples or thermistors.

(1) Thermal joint compound and supplier.

a) Wakefield 120, Wakefield Engineering Co. Wakefield, Mass.
b) Dow Corning 340, Dow Corning Corp., Midland, Michigan.
c) Astrodyne Thermal Bond 312, Astrodyne, Inc., Burlington, Mass.
d) General Electric Insulgrease – G641, General Electric Co. Cleveland Ohio, 44117.

*COOLING* - The 4CS250R is designed for conduction cooled systems by using a beryllium oxide (BeO) thermal link brazed to the anode. The BeO is a ceramic material which exhibits high thermal conductance similar to aluminum and high electrical resistance and low loss typical of ceramics. When this BeO thermal link is fastened to a suitable heat sink, it provides a low thermal resistance path allowing the anode heat to be transferred to the heat sink. The BeO also provides electrical isolation between the tube anode and the heat sink.

The heat sink can be cooled by natural (free) convection, forced air convection, liquid cooling or a combination of these methods. The design choice is determined by the tubes application but in all cases the cooling system must maintain the anode and ceramic/metal seal temperatures below 250°C.

In a conduction cooled system, anode temperature and seal temperature are determined by the thermal resistance of the thermal path between the anode and the cooling medium, e.g., air, water. The thermal path consists of the Beryllium oxide thermal link, the interface between the thermal link and heat sink, and the heat sink. The thermal resistance of the BeO thermal link versus its average temperature is given in Figure 3. The tube user must then determine the thermal resistance of the thermal link from the BeO thermal link to the cooling medium for his particular application.

*DANGER-BERYLLIUM OXIDE CERAMICS (BeO) BREATHING DUST OR FUMES CAN KILL*
Normal use of tubes with Beryllium Oxide ceramics is not hazardous, but the user is cautioned that breathing small quantities of the dust or fumes from Beryllium Oxide can seriously injure or kill. Do not alter, disassemble, grind, lap, fire, chemically clean, or perform any other operation on the Beryllium Oxide block attached to the anode of the 4CS250R, or to the socket used with the tube, which may also contain Beryllium Oxide.

Any tube or accessory part containing Beryllium Oxide ceramics should be returned to EIMAC at the end of its useful life, with authorization for disposal.

*SHOCK AND VIBRATION* - The 4CS250R is shock and vibration tested with plate and screen voltages applied. Production tubes are randomly sampled and tested under the following conditions.

With a plate voltage of 2000 volts applied, the tubes sampled are subjected to six shocks of 90 G's minimum half-sine-wave motion, with a duration of 11.0 ± 2 milliseconds, in each of the three major axes (X, Y, Z).

With the rated plate and screen voltages applied and the control grid voltage adjusted for a plate current of 100 ma. through a plate load resistance of 4900 ohms, each of the tubes tested is vibrated in the three major axes throughout the range of 28 to 2000 and back to 28 Hz in a

**CHARACTERISTICS OF 99.5% BeO**

| | | | |
|---|---|---|---|
| Electrical Resistivity in ohm-cm @250°F | $10^{14}$ | Dielectric Strength in volts/mil | 300 |
| Dielectric Constant<br>at 70°F and 1 MHz<br>at 70°F and 8.5 GHz<br>at 250°F and 8.5 GHz | <br>6.40<br>6.57<br>6.64 | Thermal Conductivity (K) in Cal./Cm2/Cm/Sec./°C of 99.5% BeO | |
| | | 20°C<br>100°C<br>400°C | 0.60<br>0.45<br>0.20 |
| Loss Tangent<br>at 70°F and 1 MHz<br>at 70°F and 8.5 GHz<br>at 250°F and 8.5 GHz | <br>0.0006<br>0.00044<br>0.00040 | (From Coors Data Sheet 0001, Aug 1965) | |

Table I

minimum time of six minutes per axis. The vibration level is maintained at 10 G's. The noise voltage developed across the plate load resistor may not exceed 30 volts rms.

*VOLTAGE BREAKDOWN VERSUS ALTITUDE* - Table II shows typical breakdown voltage versus altitude across the BeO thermal link. The measurements were taken with the heat sink plate at ground potential and the anode at the breakdown potential.

| Altitude (thousands of feet) | All voltage readings in kVdc (typical) |
|---|---|
| Sea Level | 11.5 |
| 5 | 10.5 |
| 10 | 10.5 |
| 15 | 9.0 |
| 20 | 7.5 |
| 25 | 6.5 |
| 30 | 5.5 |
| 35 | 5.0 |
| 40 | 4.0 |
| 45 | 4.0 |
| 50 | 3.5 |

Table II

*OUTPUT CAPACITANCE* - The interelectrode capacitances given in the General Characteristics are measured in a shielded fixture and does not include additional external capacitances. The typical capacitance between the anode and a heat sink plate 4'' x 4'' is 6.7 pF at 25°C. Total output capacitance will be approximately 11.5 pF. The measurement configuration is shown in Figure 1.

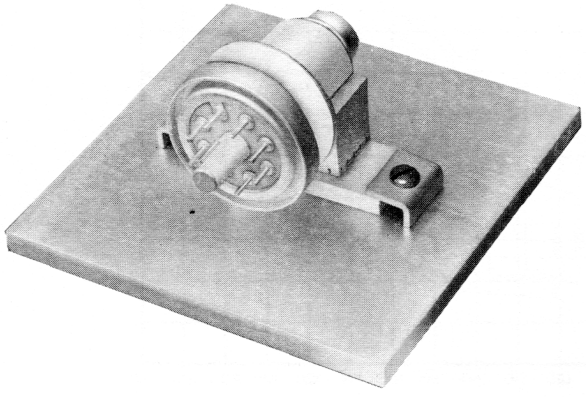

FIG. 1 TYPICAL MOUNTING CONFIGURATION

## ELECTRICAL

*HEATER/CATHODE OPERATION* - For maximum life and uniform performance, the heater voltage should be maintained within plus or minus 5% of the rated 6.0 volts at operating frequencies up to 300 MHz for CW use. Between 300 and 400 MHz, 5.75 volts is recommended and between 400 and 500 MHz 5.5 volts is recommended.

*GRID OPERATION* - Maximum rated dc bias voltage is -250 volts. D.C. resistance, grid to cathode, should be no more than 100,000 ohms. Maximum grid dissipation allowable is 2 watts.

*SCREEN OPERATION* - Maximum screen dissipation is 12 watts, normally computed by multiplying dc screen voltage by the average screen current. This computation is essentially correct except in the case of heavy plate loading when secondary emission current may mask the normal screen current.

All tetrodes, under some conditions of loading and drive, will exhibit secondary emission from the screen which changes the net current to the screen and may even cause the screen meter to reverse. Normally, secondary emission is harmless provided the screen voltage is stable. To insure stable screen voltage, it is recommended that a bleeder resistor calculated to pass 15 ma from screen to ground be used.

*PLATE OPERATION* - The plate dissipation rating of the 4CS250R is limited by anode core and ceramic/metal seal temperature. These are a function of the thermal link and are discussed in the "Cooling" section.

*MULTIPLE OPERATION* - To obtain maximum power with minimum distortion from tubes operated in multiple it is desirable to adjust individual screen or grid-bias voltages so the peak plate current for each tube is equal at the crest of the exciting voltage. Under these conditions, individual dc plate currents will be approximately equal for full input signal for class-$AB_1$ operation.

*SPECIAL APPLICATION* - If it is desired to operate this tube under conditions widely different from those listed here, write to Power Grid Tube Division, EIMAC Division of Varian, 301 Industrial Way, San Carlos, California 94070, for information and recommendations.

ANODE POWER DISSIPATION OF 4CS250R VS HEAT SINK AREA FOR WAKEFIELD B–1703 (SAFETY FACTOR INCLUDED)

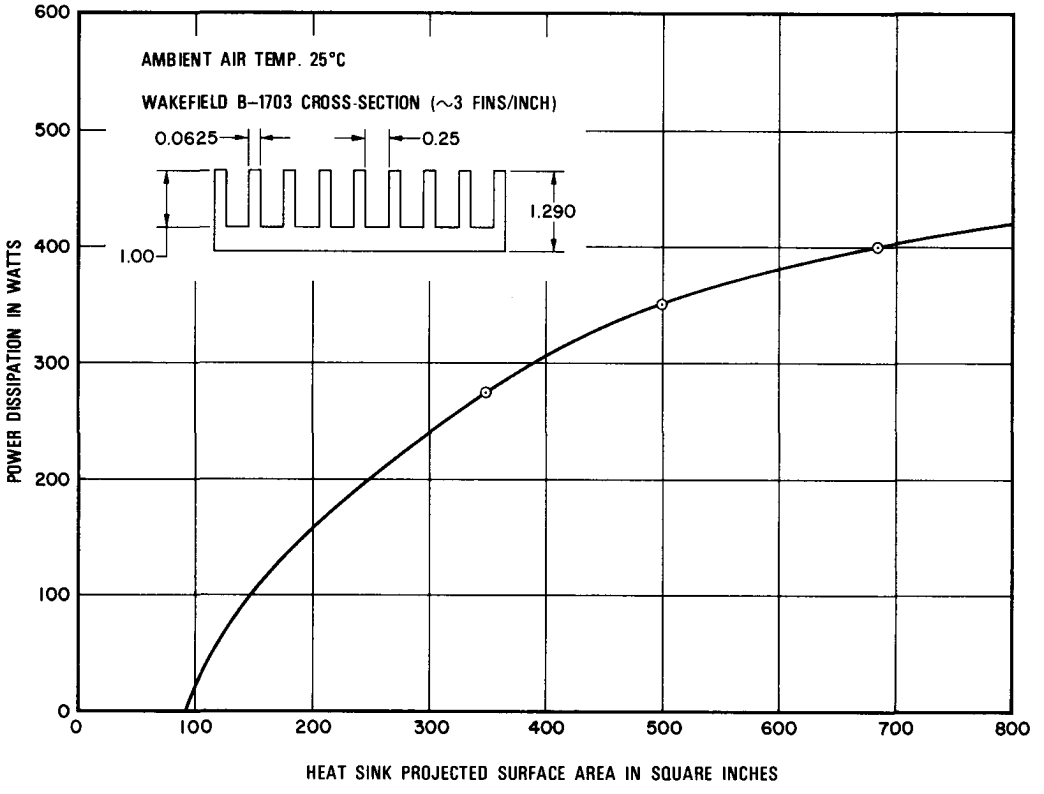


FIG. 2

THERMAL RESISTANCE VS AVERAGE TEMPERATURE OF 4CS250R THERMAL LINK INCLUDING 1 LAYER OF WAKEFIELD 120 THERMAL COMPOUND BETWEEN BEO AND HEAT SINK

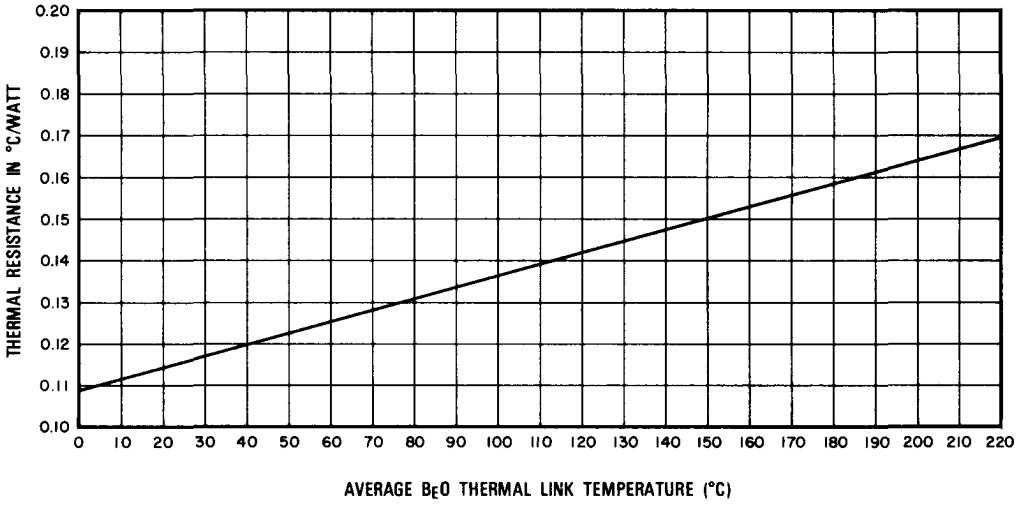


FIG. 3

PIN NO. 1. SCREEN GRID
PIN NO 2 CATHODE
PIN NO. 3. HEATER
PIN NO. 4. CATHODE
PIN NO. 5. I.C. DO NOT USE FOR EXTERNAL CONNECTION
PIN NO. 6. CATHODE
PIN NO. 7. HEATER
PIN NO. 8. CATHODE
CENTER PIN-CONTROL GRID

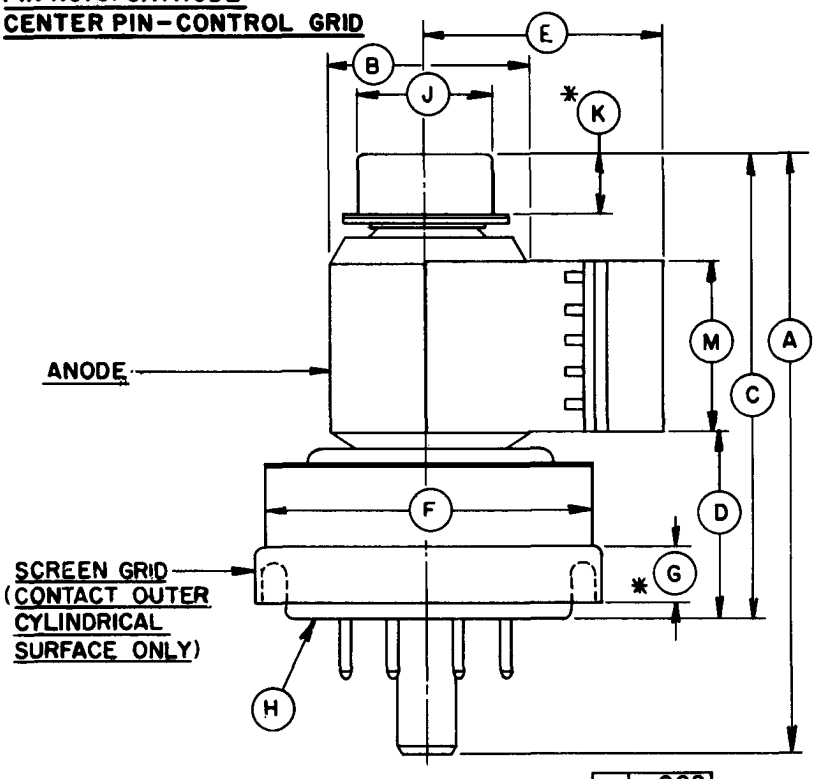


DIMENSIONAL DATA

| DIM. | INCHES | | | MILLIMETERS | | |
|---|---|---|---|---|---|---|
| | MIN. | MAX. | REF. | MIN. | MAX. | REF. |
| A | 2.324 | 2.464 | - - | 59.03 | 62.59 | - - |
| B | 0.880 | 0.894 | - - | 22.35 | 22.71 | - - |
| C | 1.810 | 1.910 | - - | 45.97 | 48.51 | - - |
| D | 0.760 | 0.800 | - - | 19.30 | 20.32 | - - |
| E | 0.985 | 1.015 | - - | 25.02 | 25.78 | - - |
| F | - - | 1.406 | - - | - - | 35.71 | - - |
| G | 0.187 | - - | - - | 4.75 | - - | - - |
| H | BASE B8-236 (JEDEC DESIGNATION) | | | | | |
| J | 0.559 | 0.573 | - - | 14.20 | 14.55 | - - |
| K | 0.240 | - - | - - | 6.10 | - - | - - |
| L | 0.214 | 0.228 | - - | 5.44 | 5.79 | - - |
| M | 0.600 | 0.640 | - - | 15.24 | 16.26 | - - |
| N | 1.733 | 1.767 | - - | 44.02 | 44.88 | - - |
| P | 19.80 | 20.30 | - - | 50.29 | 51.56 | - - |
| R | 43° | 47° | - - | 43° | 47° | - - |
| S | 0.985 | 1.105 | - - | 25.02 | 25.78 | - - |
| T | 0.107 | 0.143 | - - | 2.72 | 3.63 | - - |

NOTES:
1. REF. DIMENSIONS ARE FOR INFO. ONLY & ARE NOT REQUIRED FOR INSPECTION PURPOSES.

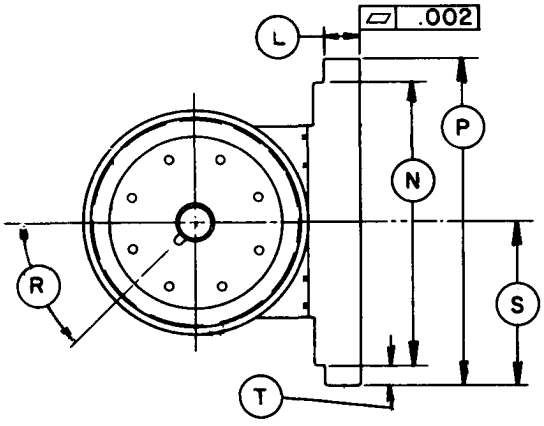


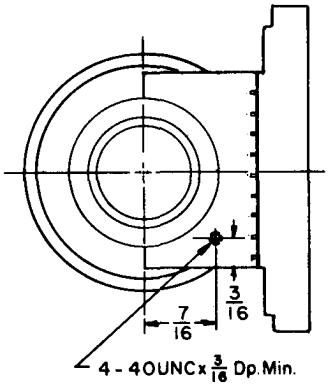


TOP VIEW