XENON FILLED RECTIFIER

4B32
(AX230)

Service Type CV2518 **American Designation 4B32**

INTRODUCTION

The 4B32 is a hot cathode, Xenon filled Rectifier with maximum ratings of 10kV peak inverse voltage and 5A peak current.

GENERAL DATA
(See also Preamble to Rectifier Section of this catalogue)

Electrical

Filament	Oxide Coated	
Filament Voltage	5·0	V
Filament Current	7·1	A
Min Filament Heating Time	30	secs
Ambient Temperature Range	−55 to +70	°C
Max Peak Inverse Voltage	10·0	kV
Max Anode Current:		
Peak	5·0	A
Mean‡	1·25	A
Under fault conditions (0·1 second Max duration)	50	A
Max Power Supply Frequency	150	c/s

Mechanical

Overall Length	8·5 inches	(216 mm)	Max
Overall Diameter	2·32 inches	(59 mm)	Max
Net Weight	8 ounces	(230 gm)	Approx
Mounting Position			Any
Base			B4F
Cooling			Natural

MAXIMUM OPERATING CONDITIONS
(Absolute Values—see Preamble)

D.C. Output with choke input filter and delayed H.T. switching

Circuit	* Diagram	Peak Inverse Voltage (up to 150c/s) kV	Anode Current in Amperes		Transformer Secondary Voltage (R.M.S.) kV	Max D.C. Output	
			Peak	Mean‡		kV	Amps
Single Phase Full Wave	A	10	5	1·25	3·5	3·1	2·5
Single Phase Full Wave Bridge	B	10	5	1·25	7·0	6·3	2·5
Three Phase Half Wave	C	10	5	1·25	4·1†	4·7†	3·75
Three Phase Full Wave	D	10	5	1·25	4·1	9·5	3·75

*For diagrams see Typical Rectifier Circuits for Choke Input Filters in the preamble to this section of the catalogue.

†For operation with constant full load. If the load resistance is increased the secondary voltage should be decreased (to avoid excessive peak inverse voltage) until at no load the reduction is 14%. The D.C. output voltage will be correspondingly decreased.

‡Mean anode currents are averaged over any period of 15 seconds maximum.

XENON FILLED RECTIFIER

4B32 (AX230)

OUTLINE

106

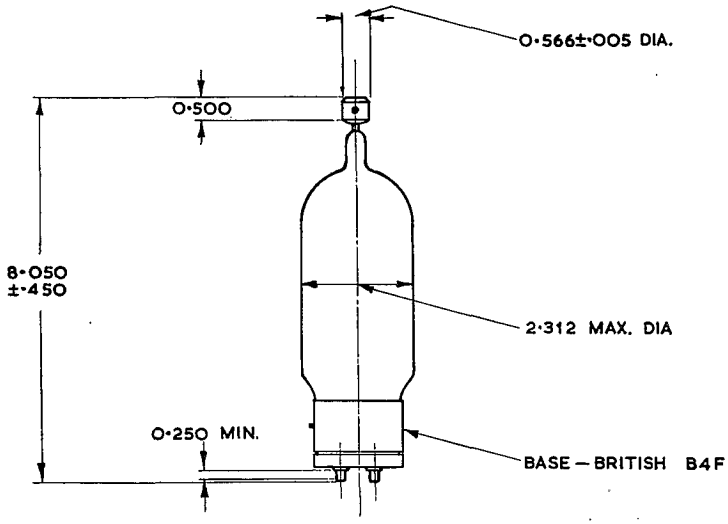

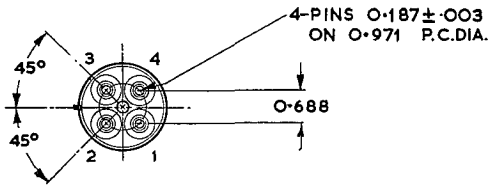

PIN	ELEMENT
1	NO CONNECTION
2	FILAMENT
3	NO CONNECTION
4	FILAMENT
CAP	ANODE

ALL DIMENSIONS IN INCHES