Coplanar-Grid Tetrode

4045A

CATHODE.

Oxide-coated filament		
Voltage	5	V
Nominal current	1.6	A

RATING.

Amplification factor	Measured at Va 145V Vg_2 70V	5.3	
Impedance	Vg_1—60V	3,600	Ω

INTER-ELECTRODE CAPACITIES.

Grid to anode	3.8	pF
Input	18	pF
Output	9.4	pF

DIMENSIONS.

Maximum overall length	165	mm.
Maximum bulb diameter	63	mm.
Base	Standard British 5-pin	
Net weight	100	g.

MAXIMUM RATINGS.

Maximum direct anode voltage	250	V
Maximum direct anode current	45	mA
Maximum potential difference between screen and control grids	150	V
Maximum control grid potential on positive swing of input voltage	10	V

It is recommended that the valve be operated in a vertical position. When operated horizontally the plane of the filament must be vertical.

Coplanar-Grid Tetrode

4045A

TYPICAL OPERATING CONDITIONS.

Anode voltage (volts)	130	130	130	130	130	180	180	*250
Control grid voltage (volts)	–40	–60	–40	–60	–40	–50	–65	–70
Positive grid voltage (volts)	43	63	53	72	59	55	70	65
Anode current (mA)	25	25	35	35	45	40	40	45
Positive grid current (mA)	0.2	0.4	0.4	0.7	0.9	0.3	0.4	0.2
Amplification factor	5.1	5.0	5.0	5.0	5.1	5.2	5.2	5.2
Anode resistance (ohms)	3,700	4,000	3,200	3,400	2,900	3,400	3,600	3,600
Load resistance (ohms)	5,000	3,000	4,000	2,000	2,800	5,000	3,500	5,000
Input peak volts	40	60	40	60	40	50	65	70
Fundamental power output (watts)	1.1	2.0	1.2	2.2	1.4	2.1	3.3	4.2
2nd harmonic (db)	29	21	33	21	30	30	26	26

* Maximum operating condition.

Coplanar-Grid Tetrode

4045A

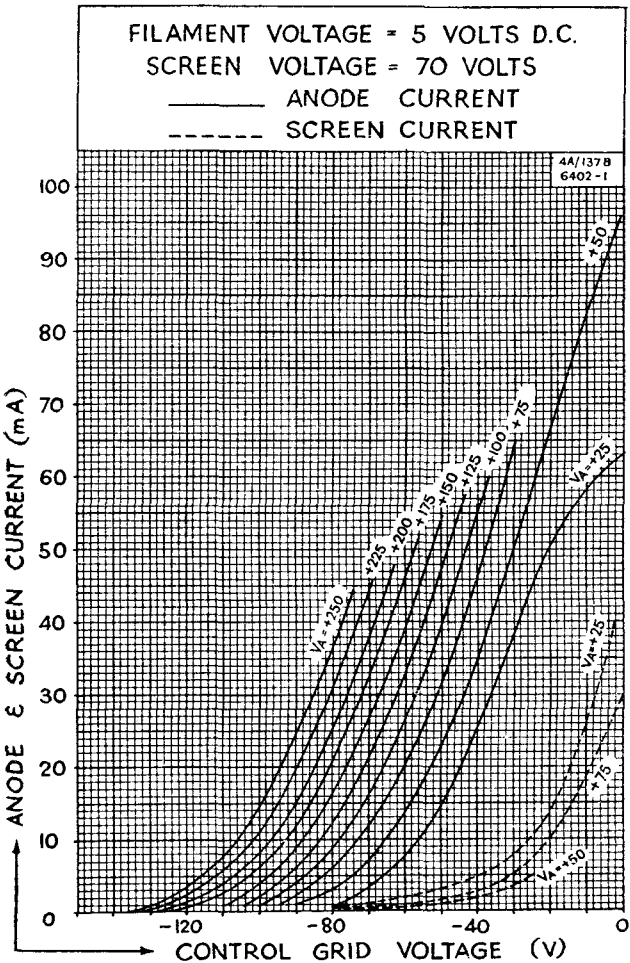

Coplanar-Grid Tetrode
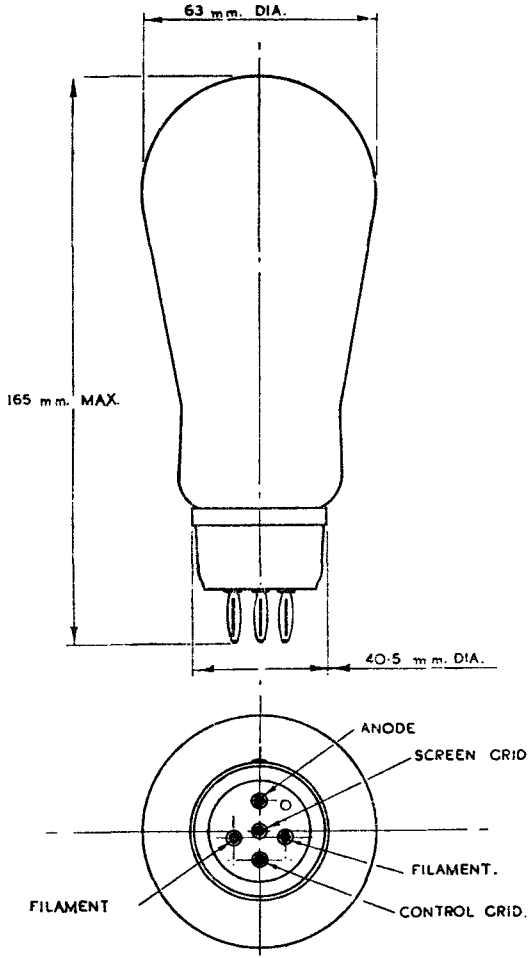
4045A