RF Power Amplifier Tetrodes

- CW Ouput up to 250 kW (4647), 500 kW (4648)
- Pulsed Output up to: 500 kW peak (4647)
  1000 kW peak (4648)
- Full Input to 1000 MHz (Each Type)
- Power Gain up to 28 dB (Each Type)

General Data

Electrical:

		Type 4647	4648	
Filament[a]				
Type		Multistrand Thoriated Tungsten		
Current, dc operating,	Typ.	840	1600	A
	Max.	860	1640	A
Starting Current (Must never exceed even momentarily)	Max.	1000	2000	A
Voltage at 840 A	Typ.	3.7	3.7	V
Minimum Heating Time to Reach Operating Voltage		60	60	s
Minimum Heating Time at Operating Voltage Before Applying Plate Voltage		60	60	s
Mu-Factor (grid No.2 to grid No.1)		9	9	
Direct Interelectrode Capacitances:				
Grid No.1 to plate		0.3	0.6	pF
Grid No.1 to grid No.2 and cathode		680	1200	pF
Plate to cathode and grid No.2		85	85	pF
Grid No.2 to cathode		130	140	pF
Grid No.2 to grid No.1		425	775	pF
Grid No.1 to cathode		255	425	pF

Mechanical (Each Type)

Operating Attitude	Tube axis vertical, either end up		
Overall Length, Maximum	(470 mm)	18.5	in
Maximum Diameter	(296 mm)	11.65	in
Terminal Connections	See Dimensional Outline		
Weight (approx.) Uncrated	(34.0 kg)	75	lb
Crated	(122.5 kg)	270	lb

Thermal (Each Type)

Maximum Ceramic-Insulator Temperature	150	°C
Maximum Metal-Surface Temperature	100	°C

Minimum Storage Temperature[b] . . . . . −65 °C

Maximum External Gas Pressure[c] Absolute . . . . . 60 psi; 4.2 kg/cm^2

Cooling:

It is important that the temperature of the individual parts of the tube not exceed the value specified.

Air Cooling

In general, forced-air cooling of the ceramic insulators and the adjacent contact areas may be required if the tube is used in a confined space without free circulation of air. Under such conditions, provision should be made for blowing an adequate quantity of air across the ceramic insulators and adjacent terminal areas to limit their maximum temperature to the value specified. Interlocking of the air flow with all power supplies is recommended to prevent tube damage in case of failure of adequate air flow.

Liquid Cooling:[d]

Liquid cooling of the filament, filament ground, grid No.1, grid No.2, and plate is required. When the environmental temperature permits, the coolant may be water; the use of distilled water or filtered deionized water is essential. The liquid flow must start before application of any voltages and preferably should continue for several seconds after removal of all voltages. Interlocking of the liquid flow through each of the cooled elements with all power supplies is recommended to prevent tube damage in case of failure of adequate liquid flow.

Liquid Pressure at any inlet, Maximum Gauge . . . . . 100 lbs/in^2 (7.0 kg/cm^2)

Resistivity of water @ 25° C, Minimum . . . . . 1.0 megohm-cm

Water Temperature from any outlet, Maximum . . . . . 70 °C

Pulsed RF Amplifier[f]

For frequencies up to 100 MHz and a maximum "ON" time[g] of 2500 μs in any 40,000-microsecond interval

Maximum Ratings, Absolute-Maximum Values:

	4647	4648	
Peak Positive-Pulse Plate Voltage[h]	32	32	max. kV
Peak Positive-Pulse Grid-No.2 Voltage[j,k] . .	1500	1500	max. V
DC or Peak Negative-Pulse Grid-No.1 Voltage	400	400	max. V
Peak Plate Current	28	55	max. A
Peak Grid-No.2 Current	2.0	4.0	max. A
Peak Rectified Grid-No.1 Current	2.5	5.0	max. A
DC Plate Current	1.7	3.4	max. A

	4647	4648	
DC Grid-No.2 Current	120	250	max. mA
DC Grid-No.1 Current	150	310	max. mA
Plate Dissipation[m] (Average)	20	40	max. kW

Typical Plate-Pulsed Operation:

In Class B service at 425 kHz with a rectangular waveshape pulse at a duty factor[g] of 0.06 and a pulse duration[g] of 2000 microseconds.

	4647	4648	
Peak Positive-Pulse Plate Voltage[h]	30	30	kV
Peak Positive-Pulse Grid-No.2 Voltage[j]	1400	1400	V
Peak Negative-Pulse Grid-No.1 Voltage[n]	225	225	V
Peak Plate Current	25	50	A
Peak Grid-No.2 Current	1.3	2.5	A
Peak Rectified Grid-No.1 Current	2.5	5.0	A
DC Plate Current	1.5	3.0	A
DC Grid-No.2 Current	80	150	mA
DC Grid-No.1 Current	150	300	mA
Peak Driver Power Output (approx.)	750	1500	W
Output Circuit Efficiency (approx.)	95	95	%
Useful Peak Power Output	500	1000	kW

RF Power Amplifier[f] – Class C Telegraphy and RF Power Amplifier[f] – Class C FM Telephony

Maximum CCS Ratings, Absolute-Maximum Values: Up to 100 MHz

	4647	4648	
DC Plate Voltage	22	22	max. kV
DC Grid-No.2 Voltage	1400	1400	max. V
DC Grid-No.1 Voltage	–400	–400	max. V
DC Plate Current	23	45	max. A
Plate Dissipation[m]	125	250	max. kW
Grid-No.2 Dissipation[m]	1.8	3.5	max. kW
Grid-No.1 Dissipation[m]	1.5	3.0	max. kW

Typical CCS Operation: **At 425 kHz**

	4647	4648	
DC Plate Voltage	20	20	kV
DC Grid-No.2 Voltage	1200	1200	V
DC Grid-No.1 Voltage	–225	–225	V
Peak RF Grid-No.1 Voltage	285	285	V
DC Plate Current	19	38	A

	4647	4648	
DC Grid-No.2 Current	0.8	1.3	A
DC Grid-No.1 Current	1.8	3.5	A
Driver Power (approx.)	500	1000	W
Circuit Efficiency (approx.)	95	95	%
Useful Power Output (approx.)	250	500	kW

Plate-Modulated RF Power Amplifier[f] – Class C Telephony

Carrier conditions per tube for use with a max. modulation factor of 1.0 unless otherwise indicated

Maximum CCS Ratings, Absolute-Maximum Values: Up to 100 MHz

	4647	4648	
DC Plate Voltage	16	16	max. kV
DC Grid-No.2 Voltage	1100	1100	max. V
DC Grid-No.1 Voltage	–400	–400	max. V
DC Plate Current	13	25	max. A
Plate Dissipation[m]	75	150	max. kW
Grid-No.2 Dissipation[m]	1.3	2.5	max. kW
Grid-No.1 Dissipation[m]	1.3	2.5	max. kW

Typical Operation

	4647	4648	At 425 kHz
DC Plate Voltage	14	14	kV
DC Grid-No.2 Voltage	1000	1000	V
DC Grid-No.1 Voltage	–250	–250	V
Peak RF Grid-No.1 Voltage	280	280	V
DC Plate Current	11	22	A
DC Grid-No.2 Current	.700	1.3	A
DC Grid-No.1 Current	1.3	2.5	A
Driver Power Output (approx.)	375	750	W
Output-Circuit Efficiency (approx.)	95	95	%
Useful Power Output (approx.)	100	200	kW

a The filament, when operated near its maximum current is capable of providing emission in excess of service requirements for which the tube is rated. To extend the filament life, it is recommended that the filament current be reduced to a value that will give adequate but not excessive emission. For accurate measurement it is

essential that the filament voltage be measured at the respective coolant terminals on the tube side of the coupling thread.

b The tube coolant ducts must be free of water before storage or shipment of the tube to prevent damage from freezing.

c The external gas pressure is related to the output cavity pressurization required to prevent corona or external arc-over.

d For additional information on liquid cooling see Section IV of the "Application Guide for RCA Power Tubes" 1CE-279A.

e Measured directly across cooled element for the indicated typical flow.

f See *RCA Transmitting Tube Operating Considerations*, CLASSES OF SERVICE given at front of this section.

g Refer to 1CE-279A for definitions.

h The magnitude of any spike on the plate voltage pulse should not exceed the peak value of the plate voltage pulse by more than 4000 volts, and the duration of any spike when measured at the peak-value level should not exceed 10% of the maximum "ON" time. The output circuit may require pressurization to prevent corona or external arc-over at the ceramic insulator.

j The magnitude of any spike on the grid-No.2 voltage pulse should not exceed the peak value of the grid-No.2 voltage pulse by more than 250 volts, and the duration of any spike when measured at the peak-value level should not exceed 10% of the maximum "ON" time.

k A negative dc voltage of 300 volts maximum may be applied to grid No.2 to prevent any tube conduction between pulses.

m Determined by calorimeter measurements. Power specified includes intercepted power radiated from the filaments.

n The grid-No.1 voltage may be a combination of fixed and self bias obtained from a series grid resistor.

Handling (Each Type)

General information for handling RCA large power tubes is given in Section II-D of RCA's "Application Guide for RCA Power Tubes", 1CE-279A. During shipment the tube is suspended by springs in a crate. An AJ2195 Lifting Adaptor, featuring a 1.0-inch I.D. eyebolt, must be attached to the tube before removing it from the shipping crate. The

use of a hoist capable of lifting a weight of 100 lbs is recommended for the uncrating operation.

Uncrating Instructions (Each Type)

The following is the recommended procedure for removing this tube from its shipping crate.

1. Cut the two metal bands which close the crate. Remove the two "ball" seals. Disengage the two hasps and remove the crate lid.
2. Open the two drop flaps on the sides of the crate.
3. Cut the wires threaded through the four wing nuts that secure the wooden mounting plate for the tube to the spring supported frame. Unscrew and remove the wing nuts and washers. Save the wing nuts and washers for Step 8.
4. Cut open the top of plastic bag enclosing the tube. Attach the AJ2195 Lifting Adaptor to the ground surface ring surrounding the grid-No.1 terminal using four 10-32 bolts.
5. Connect a hoist to the eyebolt of the lifting fixture. Raise the tube and wooden mounting plate from the crate.
6; Remove the wooden mounting plate from the tube by cutting and removing the safety wire and then unscrewing the four cap screws. Do not drop the wooden mounting plate.
7. Remove the plastic bag from the tube.
8. Reattach the wooden mounting plate to the spring supported frame using the washers and wing nuts from Step 3. Replace the crate lid. Retain the crate for future tube shipment or storage.

Tube Mounting (Each Type)

It is recommended that the tube be mounted with the axis vertical and either end up. In either case, support the weight of the tube on or by the indicated mounting surface shown on the tube outline drawing. Eight equally spaced 1/4-28 tapped holes on a 9.25-inch (23.5 mm) dia. bolt circle are provided in this surface for securing the tube in place.

If the tube is to be mounted with the input end up, the tube may be placed directly into the operating position with the hoist setup of Step 7 of the Uncrating Instructions. After mounting, the AJ2195 Lifting Adaptor should be removed from the tube and stored for future use.

If the tube is to be mounted with the output end up special care must be taken when turning it around. The recommended procedure is as follows:

1. Lift tube using the Lifting Adaptor AJ2195.
2. Attach a 15-inch diameter mounting plate to the tube mounting surface. This plate shall have two eye-bolts 180° apart in a horizontal plane. Use all eight mounting holes. See accompanying *Mounting Plate and Lifting Recommendation.*
3. Set tube down resting on mounting plate.
4. Remove the Lifting Adaptor AJ2195.
5. Lift tube using the eye-bolts on the mounting plate. It is important that the tube be held steady while being raised.
6. Carefully turn tube end for end.
7. Set tube down on stand so that it will be suspended from the mounting plate.

Cooling Considerations (Each Type)

Consult Section IV of 1CE-279A for general recommendations on liquid cooling.

The weight of the coolant hoses must be externally supported to insure against applying excessive mechanical stress to the tube.

Anode Coolant Separator (Each Type)

The AJ2196 Plate Coolant Separator was designed as an accesory for this tube and must be ordered as a separate item. Unless ordered, the tube will be delivered without a

water separator. The coolant separator shall be installed in accordance with the following procedure.

1. Visually inspect the coolant separator and tube anode water cavity to assure that they are clean and free of particles. Caution: Do not clean the anode coolant fins mechanically.
2. Place a clean, lubricant-free "O" ring (uniform size No. 237) in the moat on the anode flange.
3. Carefully insert the AJ2196 Plate Coolant Separator into the anode cavity so as not to damage the anode coolant fins along the side of the anode cavity. Note: No force is required to insert the separator. After the coolant separator has been completely inserted rotate it, if necessary, to line up the clearance holes in the separator with the tapped holes in the anode flange.
4. Secure the separator in place with eight 1/4-20 NC x 5/8-inch long stainless steel, binding-head screws.

Coolant Course Inspection (Each Type)

Please consult Section IV-D of 1CE-279A for instructions on "Inspection of Coolant Courses" and Section IV-E for instructions on "Cleaning Coolant Courses." Attention is directed especially to the anode coolant fins which are soft and easily damaged. Do not attempt to clean these fins by mechanical methods.

Electrical Considerations (Each Type)

Please consult 1CE-279A. Attention is directed to Section III-B for the design of electrical connections and to Section VI for general electrical considerations.

Electrical requirements unique to this tube include the following items:

A. Filament

A dc filament supply is required. Filament excitation with an ac supply may generate mechanical resonances in the cathode structure.

The dc electrical filament connections must be made as

follows: the positive lead is connected to the filament terminal and coolant connection on the input end of the tube using the AJ2198 connector. The negative lead is connected to the dc filament ground terminal on the output end of the tube using all eight 1/4-28 tapped holes.

B. RF Driver

The value of drive power given under typical operation represents the approximate drive power required at the specified operating frequency. The driver stage should be designed to provide an excess of power over that indicated to take care of variations in line voltage and initial tube characteristics, changes in components, and tube characteristics *during life, and transmission line mismatches.*

The input impedance of this tube may vary over a considerable range. The exact range is a function of the grid bias and input rf voltage swing. In instances where the input rf voltage swing exceeds the bias level, the input impedance of the tube will decrease considerably. This change in input drive impedance may limit the input drive voltage unless the circuit designer utilizes a low impedance bias supply and driver circuit. The RF input circuit should be connected between the RF-Grid-No.1 terminal and the RF Input Cathode Terminal. **Caution: The RF Input Cathode terminal is at filament potential and must never be connected directly to the Grid-No.1 terminal or ground.** For drive circuit recommendations, please consult your RCA representative or RCA Large Power Tube Application Engineering, Lancaster, PA 17604.

C. Control Grid and Screen Grid

Due to power radiation from the filament and secondary electron emission, the control and screen grid power dissipation will be higher than that indicated by the voltage-current product for each grid. The actual dissipations must be measured calorimetrically by measuring the electrode inlet and outlet water temperatures and the

coolant flow. For temperatures measured in °C and for water flow in GPM, the dissipation may be calculated using the equation:

Power Dissipation in kW $= 0.264\ (GPM)\ (T_{out} - T_{in})$

X-Radiation Warning
X-radiation may be produced when operating this tube. For each installation, the X-radiation must be checked and shields provided if the radiation level exceeds safe limits.

Protection Circuitry (Each Type)

Protection circuits serve a three-fold purpose; safety of personnel; protection for the tube in the event of abnormal circuit operation; and protection of the tube circuits in the event of abnormal tube operation.

Large power tubes require protective devices to insure against high voltage shocks, rf radiation, loss of coolant flow, inadequate warm-up, etc. A full treatment of protective requirements is covered in Section VI.B of the "Application Guide for RCA Power Tubes" 1CE-279.

Filament, Grid No. 1 and Grid No. 2 (Type 4647)
Flow and Pressure Drop Characteristics for Water

Coolant Course	Flow				Max. Press. Diff. for typ. flow[e]	
	Abs. min.		Typ. flow			
	gpm	cc/s	gpm	cc/s	psi	kg/cm^2
Filament	1.5	95	2.0	126	15	1.05
Filament Ground	1.5	95	2.0	126	15	1.05
Grid No.1	1.5	95	2.0	126	17	1.19
Grid No.2	1.5	95	2.0	126	15	1.05

Filament, Grid No. 1 and Grid No. 2 (Type 4648)
Flow and Pressure Drop Characteristics for Water

Coolant Course	Flow				Max. Press. Diff. for typ. flow[e]	
	Abs.		Typ. flow			
	gpm	cc/s	gpm	cc/s	psi	kg/cm^2
Filament	2.0	126	2.5	158	20	1.40
Filament Ground	2.0	126	2.5	158	20	1.40
Grid No.1	2.0	126	2.5	158	23	1.61
Grid No.2	2.0	126	2.5	158	20	1.40

MOUNTING PLATE AND LIFTING RECOMMENDATION
(Each Type)

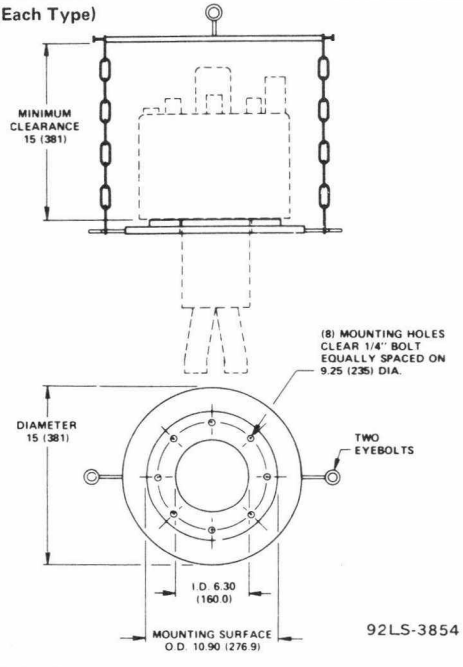

Basic dimensions in inches. Parenthetical dimensions in mm for reference.

LIFTING ADAPTER AJ2195 (*Each Type*)

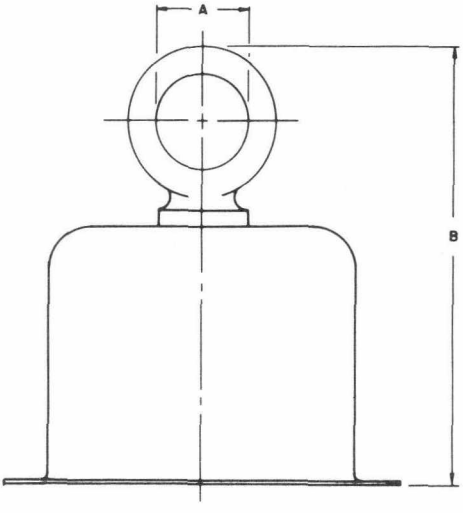

92LS—2638R1

Tabulated Dimensions*

Dimension	Inches	Millimeters
A Dia.	0.88 Min.	22.3 Min.
B	5.0 Max.	127 Max.

*Basic dimensions are in inches. Metric dimensions are derived from the basic inch dimension (1 inch = 25.4 mm)

PLATE COOLANT SEPARATOR AJ2196 (Each Type)

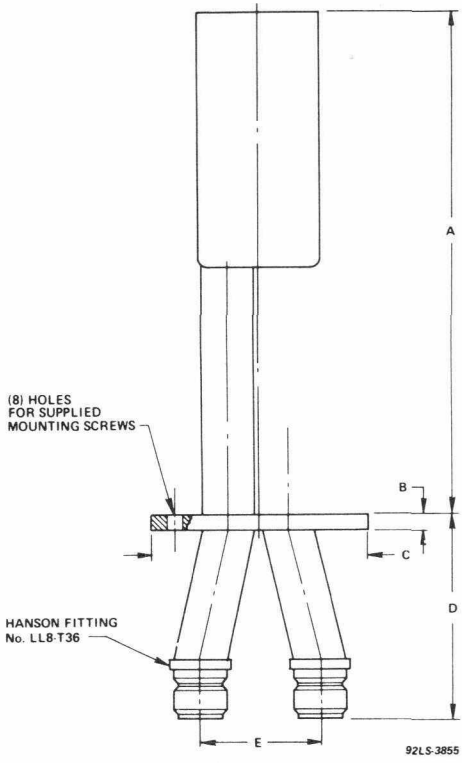

Tabulated Dimensions*

Dimension	Inches	Millimeters
A	10.95 Max.	278.1 Max.
B	0.35 ± .02	8.89 ± .51
C Dia.	5.20 ± .01	32.08 ± .25
D	5.5 Max.	139 Max.
E	2.60 ± .20	66.1 ± 5.1

*Basic dimensions are in inches. Metric dimensions are derived from the basic inch dimension (1 inch = 25.4 mm).

COOLANT CONNECTOR AJ2197 (Each Type)

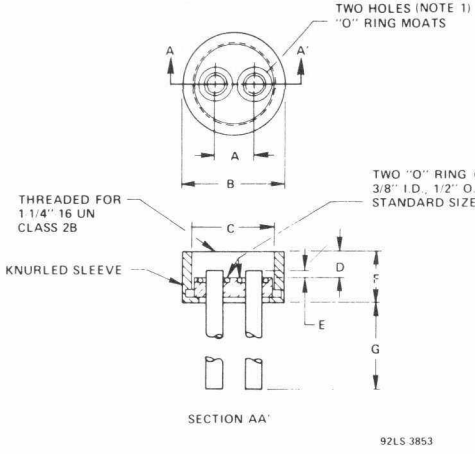

Tabulated Dimensions*

Dimension	Inches	Millimeters
A	0.53	13.5
B Dia.	1.50	38.1
C Dia.	1.15	29.2
D	0.38	9.6
E	0.12	3.0
F	0.69	17.5
G	3.32 Min.	84.3 Min.

Note 1— "O" Ring Moat has an OD of 0.485" (12.32 mm) and a depth of 0.05" (1.3 mm)

*Basic dimensions are in inches. Metric dimensions are derived from the basic inch dimension (1 inch = 25.4 mm).

FILAMENT ELECTRICAL AND COOLANT CONNECTOR AJ2198
(Each Type)

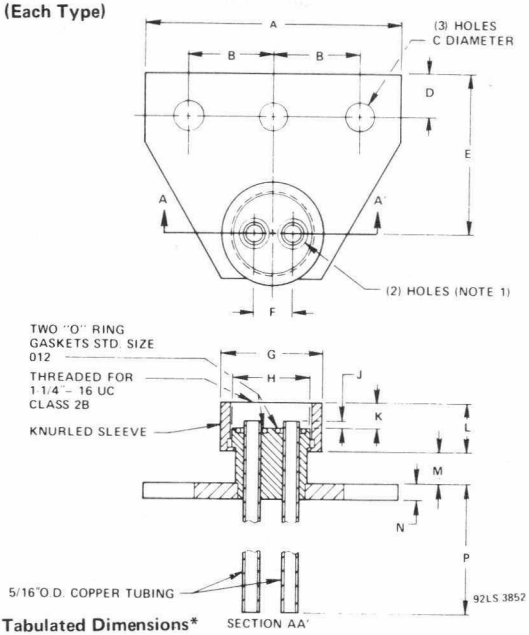

Tabulated Dimensions*

Dimension	Inches	Millimeters
A	3.75	95.3
B	1.25	31.7
C	0.39	9.9
D	0.62	15.7
E	2.37	60.2
F	0.53	13.5
G	1.50	38.1
H	1.15	29.2
J	0.12	3.0
K	0.38	9.6
L	0.69	17.5
M	0.69	17.5
N	0.25	6.4
P	2.62 Min.	66.7 Min.

Note 1— Moat for "O" ring has an OD of 0.485 inch (12.3 mm) and a depth of 0.05 inch (1.3 mm).

DIMENSIONAL OUTLINE (Each Type)

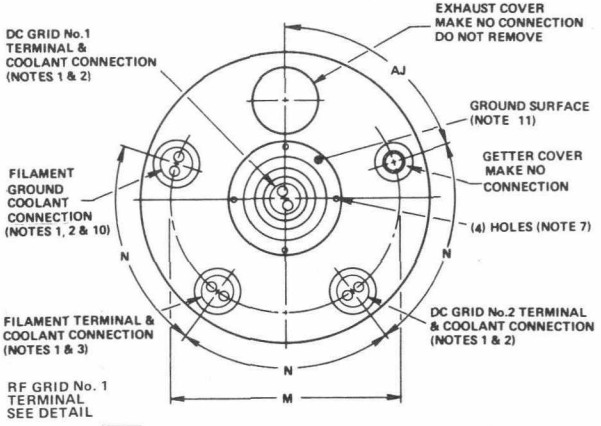

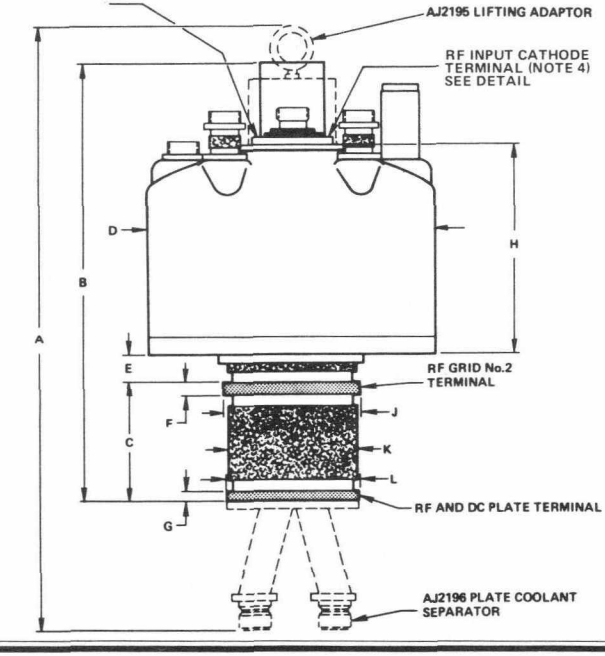

DIMENSIONAL OUTLINE (Bottom View)

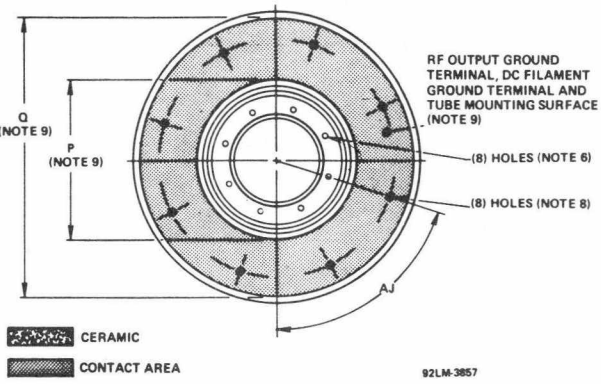

DETAIL OF RF INPUT CATHODE AND RF GRID NO. 1 TERMINAL, CONTACT SURFACES AND DC GRID NO. 1 TERMINAL

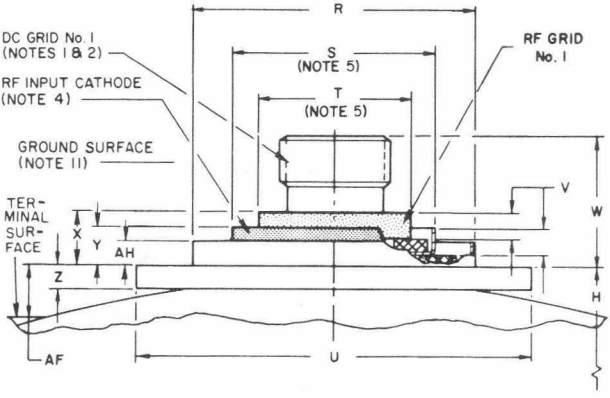

Detail of Filament and DC Grid No.2 Terminals

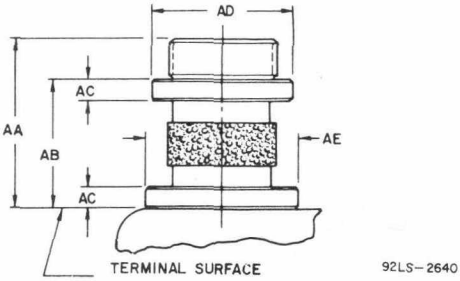

Detail of Filament Ground Terminal

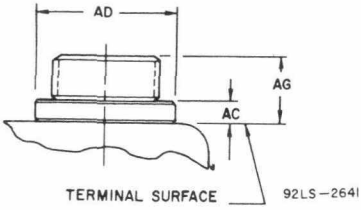

Notes for Dimensional Outline

1. Terminal is 1-1/4" dia. threaded 0.5" (12.7 mm) long with 16 UN class 2A thread. It has two holes 0.312" 0.324" (7.92–8.23 mm) diameter spaced 0.531" (13.49 mm) on centers.
2. Terminal will accept coolant connector AJ2197.
3. Terminal will accept filament electrical and coolant connector AJ2198.
4. The RF Input Cathode Terminal is at filament potential. Do not ground.
5. This diameter dimension is held only over length of V.
6. Eight (8) holes tapped 1/4"-20 NC equally spaced on a 4.20" (106.7 mm) diameter bolt circle.
7. Four (4) holes tapped 10-32 NF to a minimum depth of .20" (5.1 mm) equally spaced on a 4.20" ± .03" (106.68 ± .76 mm) diameter bolt circle.
8. Eight (8) holes, tapped 1/4"-28 NF to a minimum depth of

.30" (7.6 mm) equally spaced on a 9.25" ± .03" (234.95 ± .76 mm) diameter bolt circle.

9. Contact should not be made at a diameter smaller than 6.30" (160.0 mm) nor greater than 10.90" (276.9 mm).

10. Make no electrical connections.

11. Ground surface is used to attach Lifting Adaptor AJ2195 and may be used during operation to support input circuit components at ground potential.

Tabulated Dimensions for Dimensional Outline

Dimension	Inches	Millimeters	Degrees
A	26.0 max.	660 max.	
B	18.5 max.	470 max.	
C	4.84 ± .02	122.94 ± .51	
D Dia.	11.65 max.	295.9 max.	
E	1.07 ± .03	27.18 ± .76	
F	0.52 ± .01	13.21 ± .25	
G	0.42 ± .01	10.67 ± .25	
H	8.35 ± .10	212.1 ± 2.5	
J Dia.	5.50 ± .01	139.70 ± .25	
K Dia.	5.12 ± .10	130.0 ± 2.5	
L Dia.	5.25 ± .01	133.35 ± .25	
M Dia.	9.10 ± .08	231.1 ± 2.0	
N	–	–	$72^{o} \pm 3^{o}$
P Dia.	6.30 max.	160.0 max.	
Q Dia.	10.90 min.	276.9 min.	
R Dia.	3.30 max.	83.9 max.	
S Dia.	2.319 ± .012	58.90 ± .30	
T Dia.	1.725 ± .015	43.82 ± .38	
U	4.50 ± .02	114.30 ± .51	
V	0.24 min.	6.1 min.	
W	1.47 ± .06	37.3 ± 1.5	
X	0.63 ± .06	16.00 ± 1.52	
Y	0.46 ± .06	11.68 ± 1.52	
Z	0.22 ± .02	5.59 ± .51	
AA	2.00 ± .05	50.8 ± 1.3	
AB	1.50 ± .04	38.10 ± 1.02	
AC	0.25 ± .02	6.35 ± .51	
AD Dia.	1.62 ± .02	41.15 ± .51	
AE Dia.	1.74 ± .02	44.20 ± .51	
AF	0.62 ± .10	15.7 ± 2.5	
AG	0.75 ± .05	19.0 ± 1.3	
AH	0.45 max.	11.4 max.	
AJ			$72^{o} \pm 5^{o}$

COOLING CHARACTERISTICS (Type 4647)

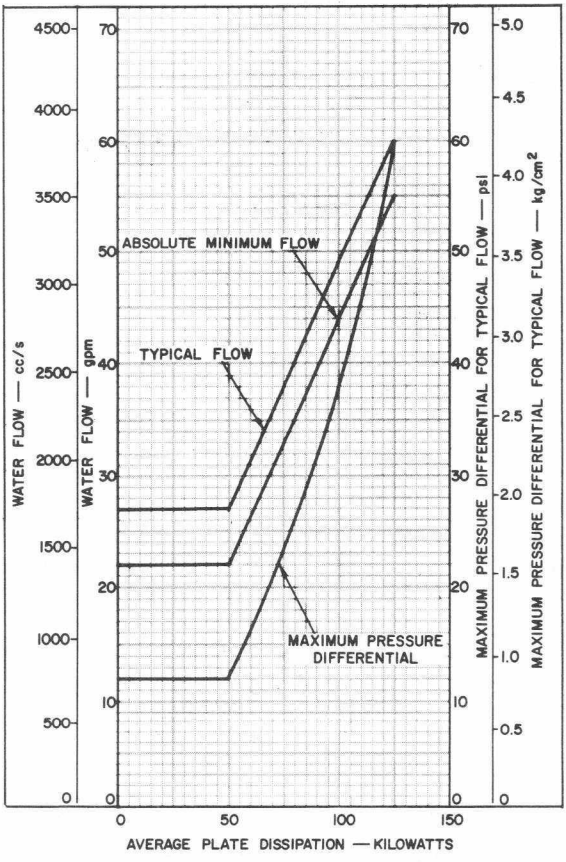

92LM—2589

COOLING CHARACTERISTICS (Type 4648)

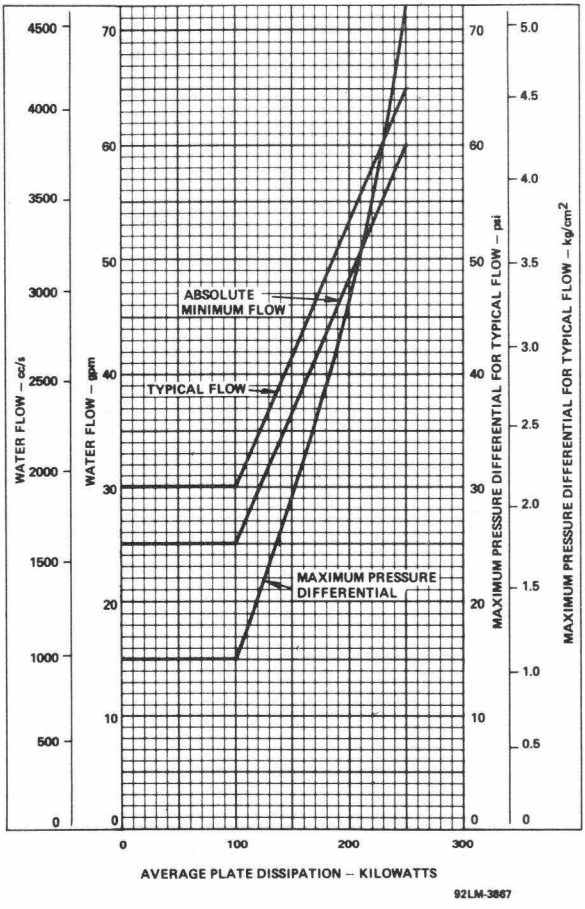

TYPICAL PLATE CHARACTERISTICS (E_{c2} = 1400 V)
(Type 4647)

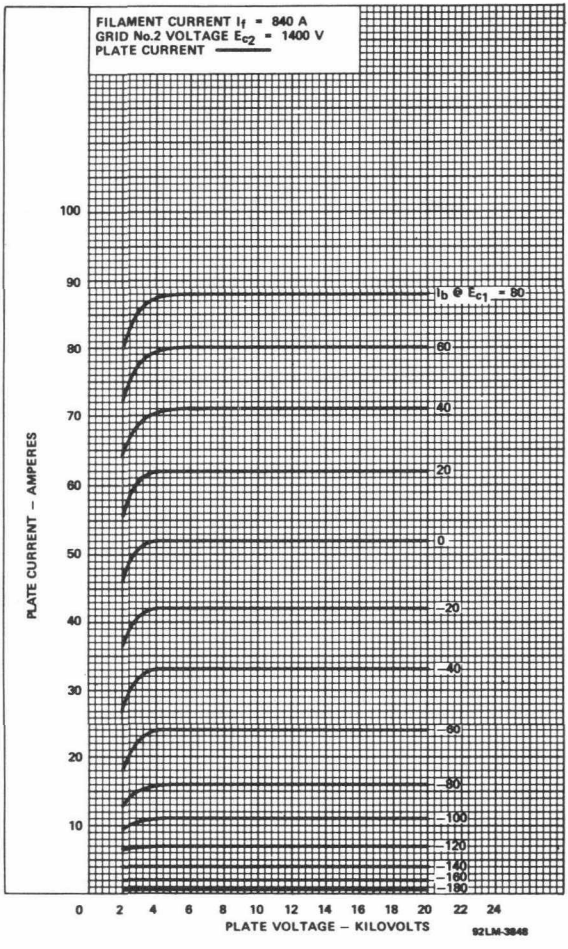

TYPICAL PLATE CHARACTERISTICS (E_{c_2} = 1400 V)
(Type 4648)

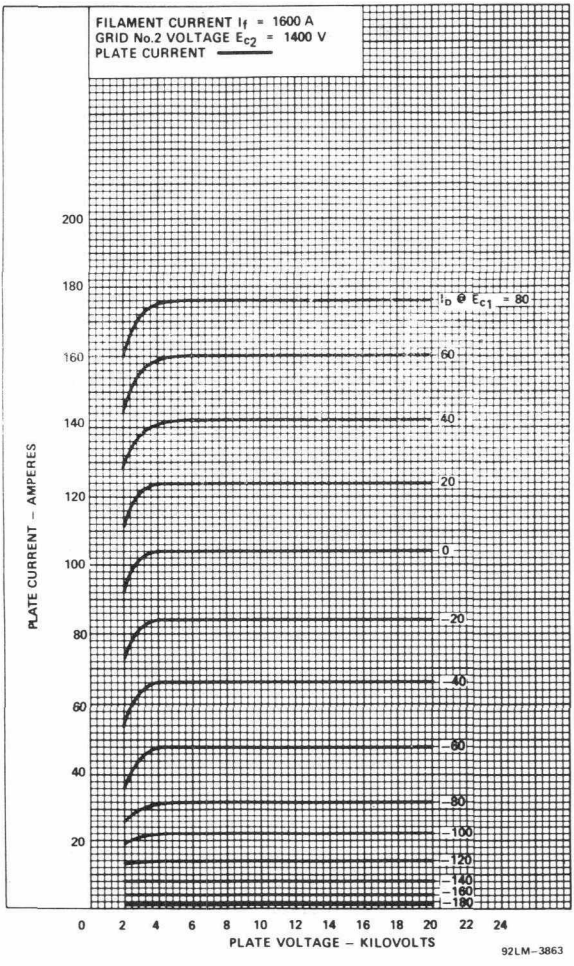

TYPICAL CHARACTERISTICS (E_{c2} = 1400 V)
(Type 4647)

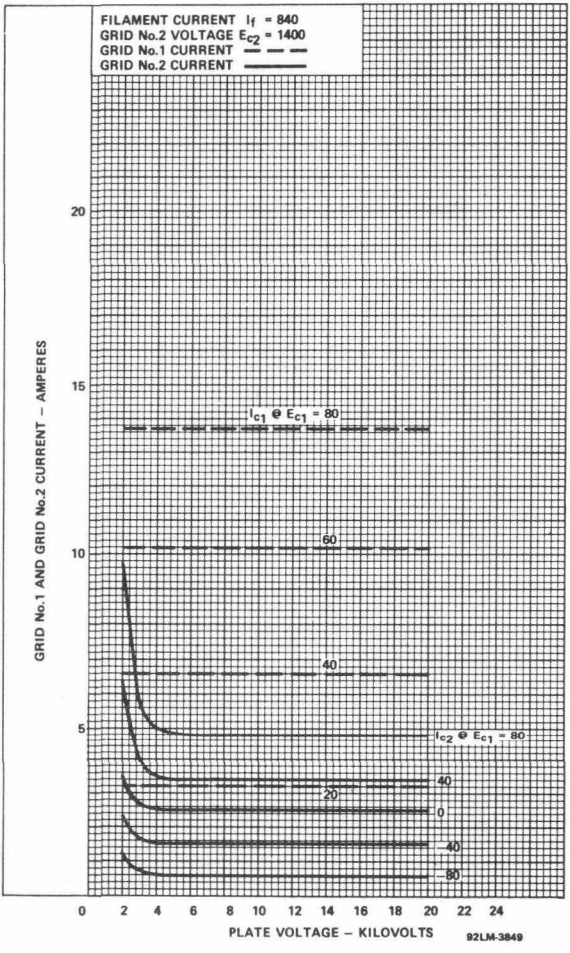

TYPICAL CHARACTERISTICS (E_{c_2} = 1400 V)
(Type 4748)

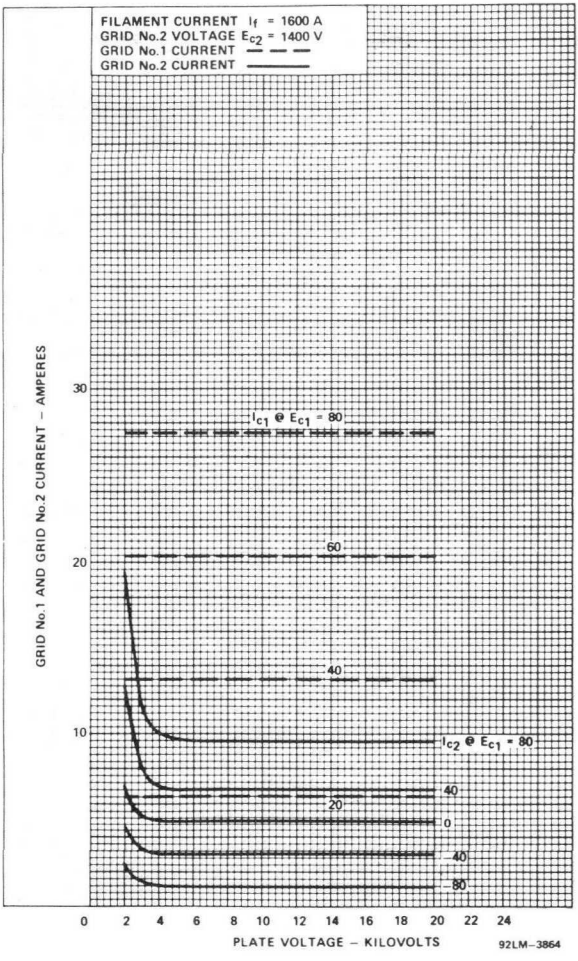

TYPICAL PLATE CHARACTERISTIC (E_{c_2} = 1000 V)
(Type 4647)

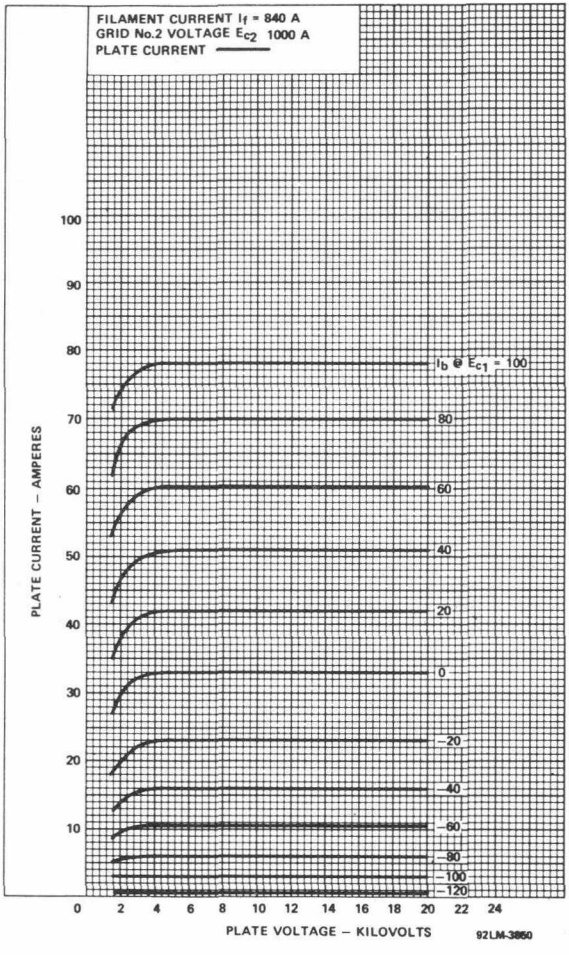

TYPICAL PLATE CHARACTERISTIC (E_{c2} = 1000 V)
(Type 4648)

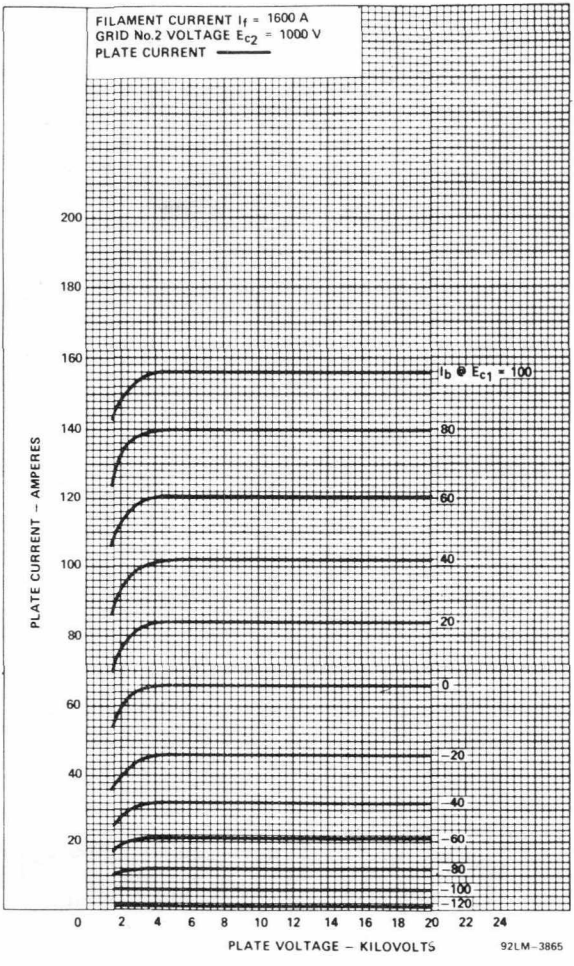

TYPICAL CHARACTERISTICS (E_{c2} = 1000 V)
(Type 4647)

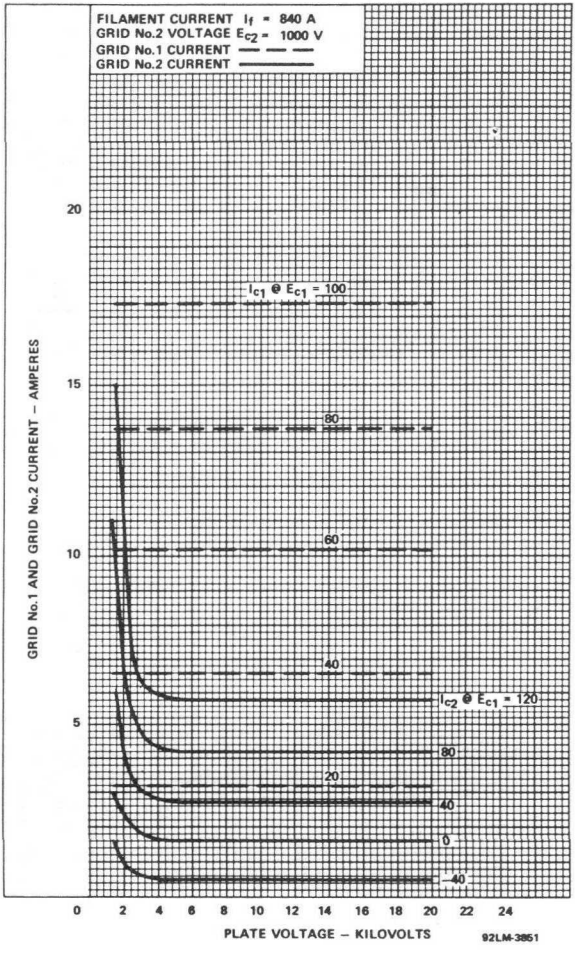
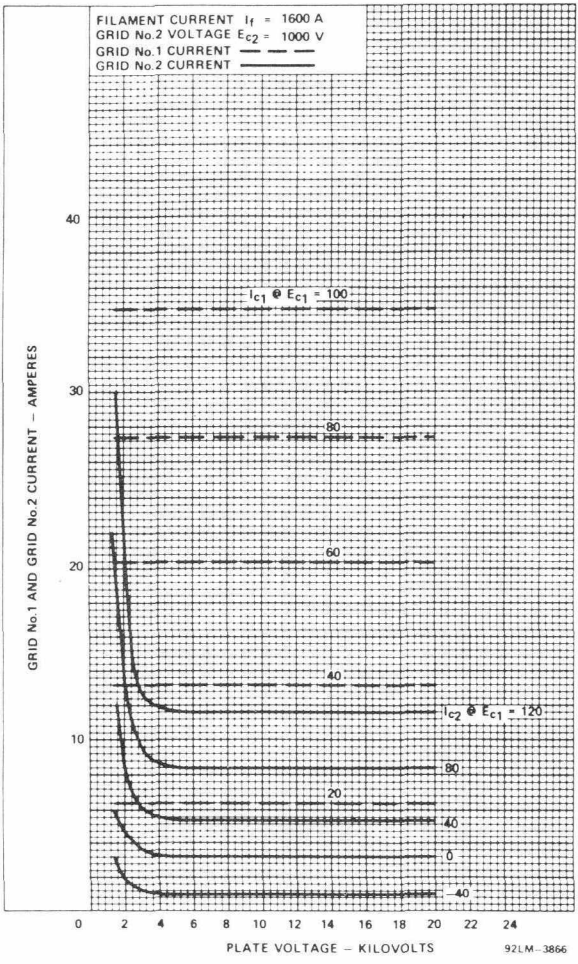
TYPICAL CHARACTERISTICS (E_{c2} = 1000 V)
(Type 4648)