EITEL-McCULLOUGH, INC.
SAN BRUNO, CALIFORNIA

450TL

MEDIUM-MU TRIODE
•
MODULATOR
OSCILLATOR
AMPLIFIER

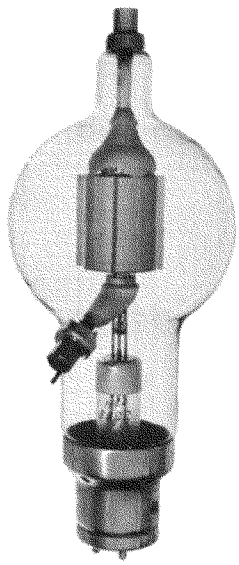

GENERAL CHARACTERISTICS

ELECTRICAL

Filament: Thoriated tungsten		
Voltage	7.5	volts
Current	12.0	amperes
Amplification Factor (Average)	18	
Direct Interelectrode Capacitances (Average)		
Grid-Plate	5.2	$\mu\mu f$
Grid-Filament	7.3	$\mu\mu f$
Plate-Filament	0.9	$\mu\mu f$
Transconductance (I_b=500 ma., E_b=4000, e_c=–75)	6060	μmhos

MECHANICAL

Base	4 pin, No. 5002B	
Basing	RMA type 4AQ	
Maximum Overall Dimensions:		
Length	12.625	inches
Diameter	5.125	inches
Net weight	1	pound
Shipping weight (Average)	4	pounds

AUDIO FREQUENCY POWER AMPLIFIER AND MODULATOR
Class B

	Typical Operation—2 Tubes			Max. Rating	
D-C Plate Voltage	3000	4000	5000	6000	volts
Max.-Signal D-C Plate Current, per tube*	•	•	•	600	ma.
Plate Dissipation, per tube*	•	•	•	450	watts
D-C Grid Voltage (approx.)	–110	–175	–240		volts
Peak A-F Grid Input Voltage	650	740	860		volts
Zero-Signal D-C Plate Current	200	150	120		ma.
Max.-Signal D-C Plate Current	770	675	620		ma.
Max.-Signal Driving Power (approx.)	15	13	15		watts
Effective Load, Plate-to-Plate	7800	12800	18600		ohms
Max.-Signal Plate Power Output	1400	1800	2200		watts

*Averaged over any sinusoidal audio frequency cycle.

RADIO FREQUENCY POWER AMPLIFIER AND OSCILLATOR
Class-C *Telegraphy
(Key down conditions without modulation)

	Typical Operation—1 Tube			Max. Rating	
D-C Plate Voltage	3000	4000	5000	6000	volts
D-C Plate Current	500	450	450	600	ma.
D-C Grid Current	65	53	54	75	ma.
D-C Grid Voltage	–275	–400	–500		volts
Plate Power Output	1050	1350	1800		watts
Plate Input	1500	1800	2250		watts
Plate Dissipation	450	450	450	450	watts
Peak R. F. Grid Input Voltage, (approx.)	640	740	870		volts
Driving Power, (approx.)	38	35	42		watts

*The above figures show actual measured tube performance, and do not allow for variations in circuit losses.

(Effective 9-1-44) Copyright, 1946 by Eitel-McCullough, Inc.

Note:

Dual connections for each filament lead are provided within the base of each 450TH and 450TL (see basing diagram within the data sheet). Corresponding socket terminals must be connected in parallel to provide proper distribution of filament and RF charging currents. Adequate ventilation or air cooling must be provided so that the seals and envelope do not exceed 200° C. under operating conditions.

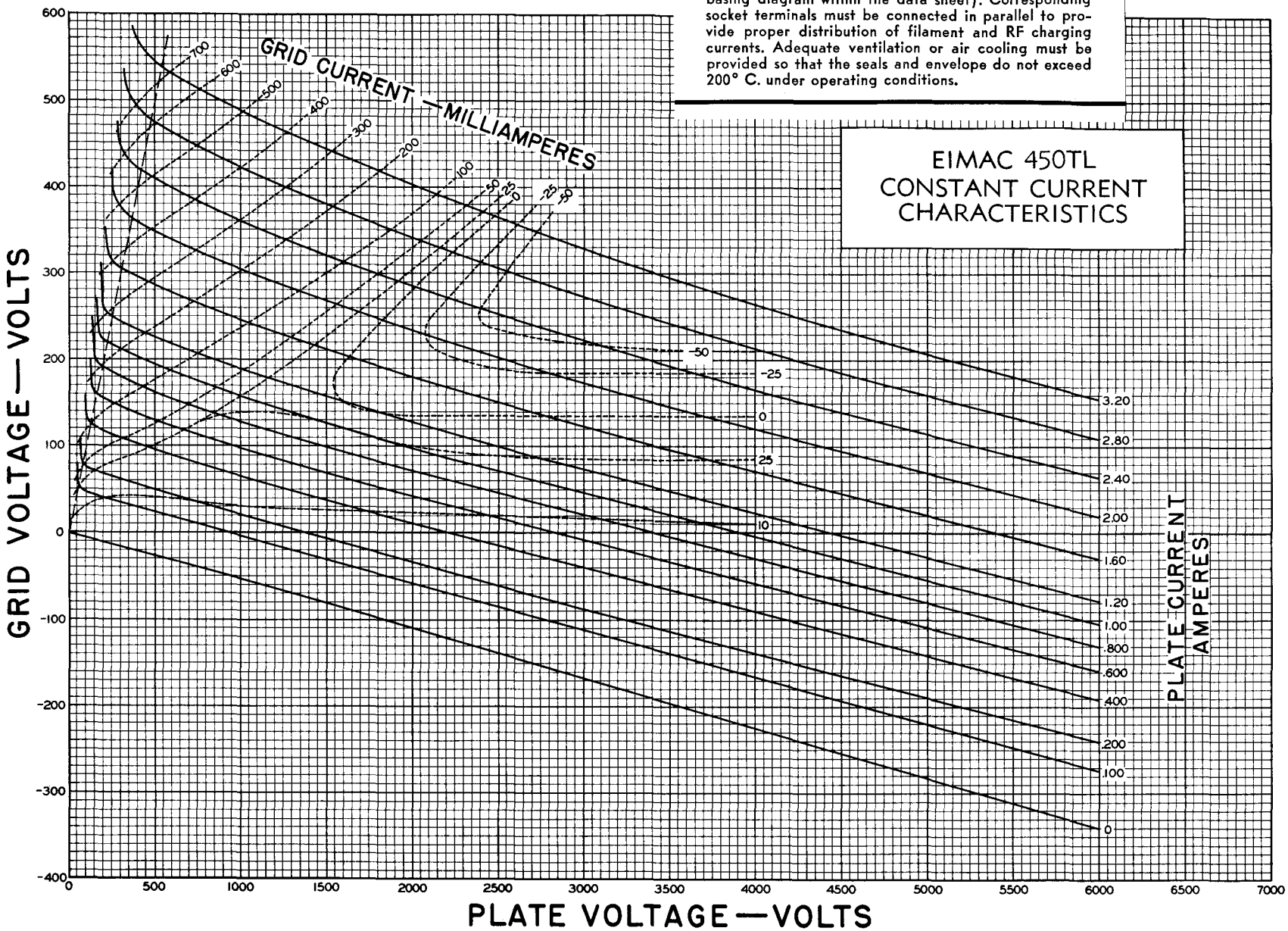

Eimac 450TL

DRIVING POWER vs. POWER OUTPUT

•

The three charts on this page show the relationship of plate efficiency, power output and grid driving power at plate voltages of 3000, 4000, and 5000 volts. These charts show combined grid and bias losses only. The driving power and power output figures do not include circuit losses. The plate dissipation in watts is indicated by P_p.

Points A, B, and C are identical to the typical Class C operating conditions shown on the first page under 3000, 4000, and 5000 volts respectively.

•

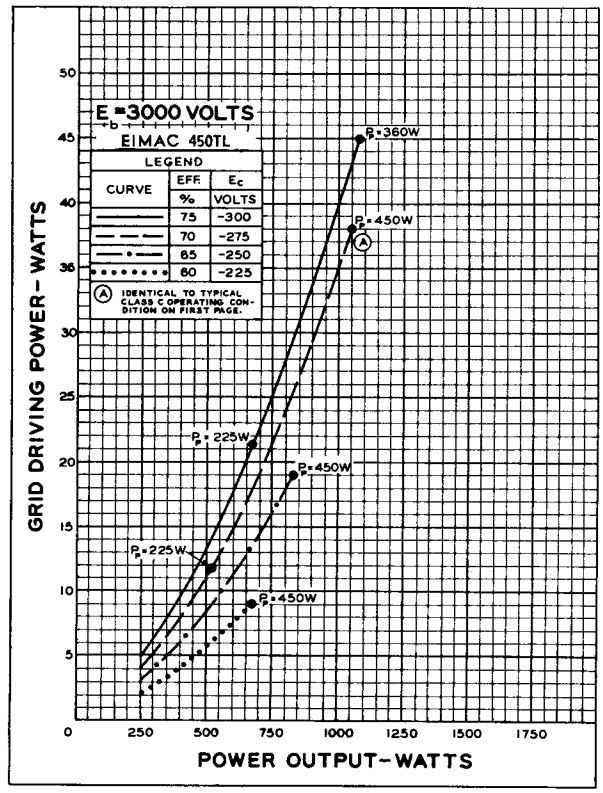

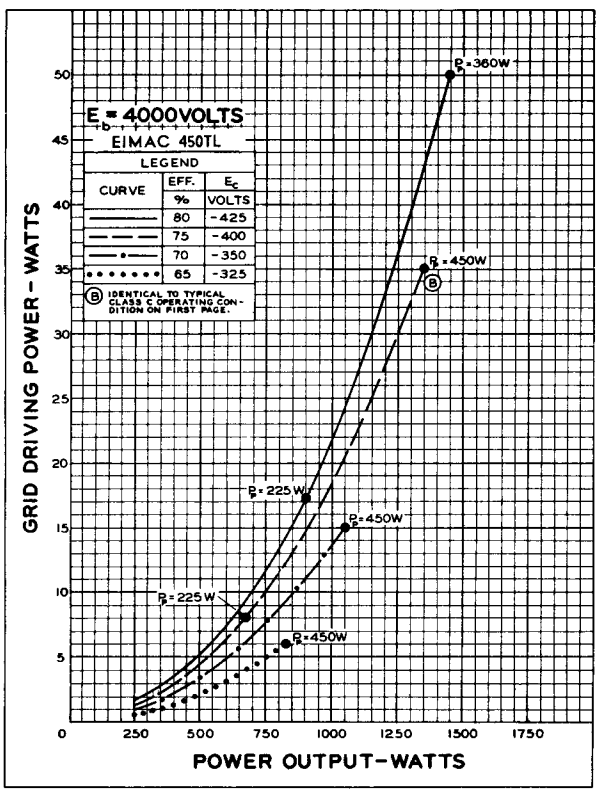

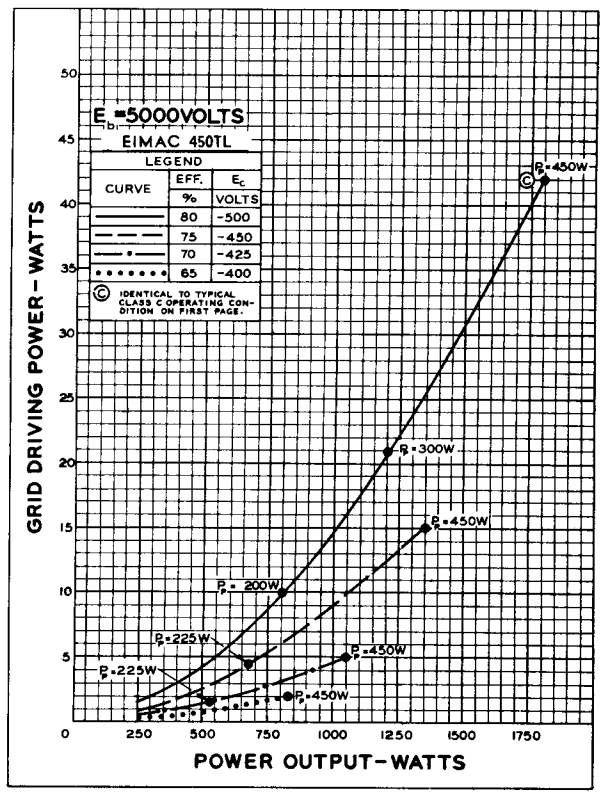

Eimac 450TL

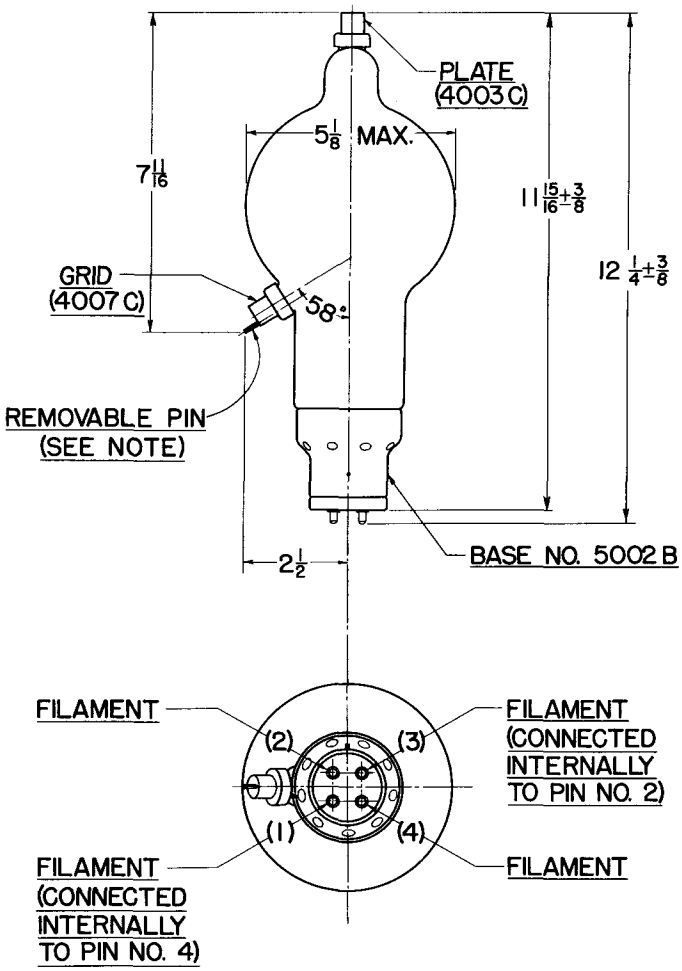

PLATE CAP
NO. 4003C

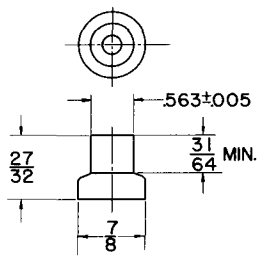

GRID CAP
NO. 4007C

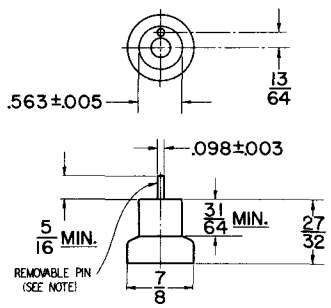

4A0

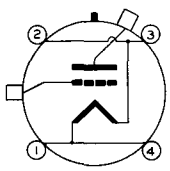

BASE NO. 5002 B

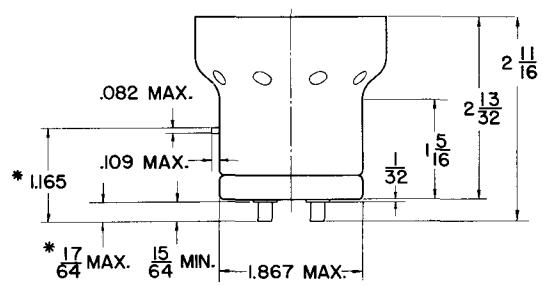

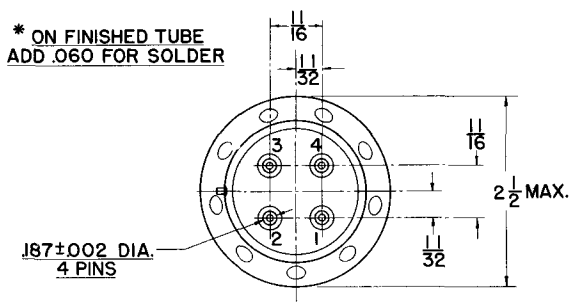

NOTE:—The grid terminal on the new 450TH and TL type tube is now .563" in diameter. To accommodate existing equipment which uses the 450TH or TL tubes with the old style .098" grid terminal, an adaptor pin is provided. This adaptor pin, if not needed, may be removed by unscrewing.