4–500A

TECHNICAL DATA

RADIAL BEAM
POWER TETRODE

The EIMAC 4-500A is a compact, ruggedly constructed, broadcast-quality tetrode having a maximum plate dissipation rating of 500 watts. It is intended for use as an amplifier, oscillator, or modulator. The low grid-plate capacitance of this tetrode coupled with its low driving-power requirement allows considerable simplification of the associated circuit and driver stage.

The 4-500A is cooled by radiation from the plate and by circulation of forced-air through the base, around the envelope, and over the plate seal. Cooling can be greatly simplified by using an EIMAC SK-400 Series Air-System Socket, and its accompanying glass chimney. This socket is designed to maintain the correct balance of cooling air between the component parts of the tube.

The 4-500A is especially recommended for applications where long life and consistent performance are of prime consideration.

GENERAL CHARACTERISTICS[1]

ELECTRICAL

Filament: Thoriated Tungsten	
Voltage	10.0 ± 0.5 V
Current, at 10.0 volts	10.2 A
Amplification Factor (Average):	
Grid to Screen	5.5
Direct Interelectrode Capacitances (grounded filament)[2]	
Cin	15.0 pF
Cout	5.0 pF
Cgp	0.15 pF
Frequency of Maximum Rating:	
CW	110 MHz

1. Characteristics and operating values are based on performance tests. These figures may change without notice as the result of additional data or product refinement. EIMAC Division of Varian should be consulted before using this information for final equipment design.

2. Capacitance values are for a cold tube as measured in a special shielded fixture in accordance with Electronic Industries Association Standard RS-191.

MECHANICAL

Maximum Overall Dimensions:	
Length	7.000 in; 177.80 mm
Diameter	3.562 in; 90.47 mm
Net Weight	8.7 oz; 245 gm

(Effective 3-10-72) © by Varian

Printed in U.S.A.

Operating Position . . . . . Vertical, base up or down
Maximum Operating Temperature:
Plate Seal . . . . . 225°C
Base Seals . . . . . 200°C
Cooling . . . . . Radiation and forced air
Base . . . . . Special 5-pin
Recommended Socket . . . . . EIMAC SK-410
Recommended Chimney . . . . . EIMAC SK-426
Recommended Heat-Dissipation Connectors:
Plate HR-6

RADIO FREQUENCY LINEAR AMPLIFIER GRID DRIVEN Class AB_1

ABSOLUTE MAXIMUM RATINGS:

DC PLATE VOLTAGE	4000	VOLTS
DC SCREEN VOLTAGE	1000	VOLTS
DC PLATE CURRENT	0.450	AMPERE
PLATE DISSIPATION	500	WATTS
SCREEN DISSIPATION	35	WATTS
GRID DISSIPATION	12	WATTS

1. Adjust for specified zero-signal plate current.
2. Approximate values.
3. The intermodulation distortion products are referenced against one tone of a two-equal-tone signal.

TYPICAL OPERATION (Frequencies to 30 MHz)

Plate Voltage	2500	3000	4000	Vdc
Screen Voltage	750	750	750	Vdc
Grid Voltage [1]	-117	-130	-140	Vdc
Zero-Signal Plate Current	150	100	80	mAdc
One-Tone Plate Current	338	320	322	mAdc
Two-Tone Plate Current	254	225	215	mAdc
Zero-Sig. Screen Current [2]	0	0	0	mAdc
One-Tone Screen Current [2]	38	36	32	mAdc
Two-Tone Screen Current [2]	12	10	8	mAdc
Peak rf Grid Voltage [2]	103	116	126	v
Plate Dissipation	418	427	500	W
One-Tone Plate Output Power	427	533	773	W
Resonant Load Impedance	3700	4800	6500	Ω
IMD Products [3]				
3rd Order	-33	-33	-29	dB
5th Order	-38	-35	-34	dB

RADIO FREQUENCY POWER AMPLIFIER OR OSCILLATOR (Class C Telegraphy or FM Telephony - Key Down Conditions)

ABSOLUTE MAXIMUM RATINGS:

DC PLATE VOLTAGE	4000	VOLTS
DC SCREEN VOLTAGE	600	VOLTS
DC PLATE CURRENT	0.450	AMPERE
PLATE DISSIPATION	500	WATTS
SCREEN DISSIPATION	35	WATTS
GRID DISSIPATION	12	WATTS

1. Approximate value.
2. Driving power increases with frequency. Values shown are calculated or measured at Low Frequency.

TYPICAL OPERATION (Frequencies to 75 MHz)

Plate Voltage	2500	3000	3800	Vdc
Screen Voltage	500	500	500	Vdc
Grid Voltage	-265	-270	-280	Vdc
Plate Current	402	428	445	mAdc
Screen Current [1]	34	48	49	mAdc
Peak rf Grid Voltage [1]	365	380	390	v
Driving Power [2]	6.6	8.4	9.0	W
Plate Input Power	1005	1285	1685	W
Plate Dissipation	360	395	420	W
Plate Output Power	645	890	1265	W
Resonant Load Impedance	2520	2970	4030	Ω

PLATE MODULATED RADIO FREQUENCY POWER AMPLIFIER-GRID DRIVEN

Class C Telephony (Carrier Conditions)

ABSOLUTE MAXIMUM RATINGS:

DC PLATE VOLTAGE	3200	VOLTS
DC SCREEN VOLTAGE	600	VOLTS
DC GRID VOLTAGE	-500	VOLTS
DC PLATE CURRENT	0.35	AMPERE
PLATE DISSIPATION [1]	335	WATTS
SCREEN DISSIPATION [2]	35	WATTS
GRID DISSIPATION [2]	12	WATTS

1. Corresponds to 500 watts at 100% sine-wave modulation.
2. Average, with or without modulation.
3. Approximate value.
4. Driving power increases with frequency. Values shown are calculated for low frequency.

TYPICAL OPERATION (Frequencies to 30 MHz)
(Continuous Service)

Plate Voltage	2700	3200	Vdc
Screen Voltage	500	500	Vdc
Grid Voltage	-280	-300	Vdc
Plate Current	338	337	mAdc
Screen Current [3]	30	40	mAdc
Grid Current [3]	12	15	mAdc
Peak af Screen Voltage [3] (100% modulation)	500	500	v
Peak rf Grid Voltage [3]	360	380	v
Calculated Driving Power [4]	4.3	5.8	W
Plate Input Power	915	1075	W
Plate Dissipation	245	245	W
Plate Output Power	670	830	W
Resonant Load Impedance	3610	4390	Ω

AUDIO FREQUENCY POWER AMPLIFIER OR MODULATOR Class AB, Grid Driven, Sinusoidal Wave

ABSOLUTE MAXIMUM RATINGS (Per Tube)

DC PLATE VOLTAGE	4000	VOLTS
DC SCREEN VOLTAGE	1000	VOLTS
DC PLATE CURRENT	0.450	AMPERE
PLATE DISSIPATION	500	WATTS
SCREEN DISSIPATION	35	WATTS
GRID DISSIPATION	12	WATTS

1. Approximate value.
2. Per tube.
3. Adjust to give stated zero-signal plate current.

TYPICAL OPERATION (Two Tubes - Class AB_1)

Plate Voltage	3000	3800	Vdc
Screen Voltage	750	750	Vdc
Grid Voltage[1/3]	-138	-150	Vdc
Zero-Signal Plate Current	200	150	mAdc
Max. Signal Plate Current	735	715	mAdc
Zero-Signal Screen Current	0	0	mAdc
Max. Signal Screen Current[1]	16	16	mAdc
Max. Signal Grid Current	0	0	mAdc
Peak af Grid Voltage[2]	123	135	v
Peak Driving Power	0	0	w
Max. Signal Plate Dissipation	480	500	W
Plate Output Power	1240	1720	W
Load Resistance (tube-to-tube)	7800	10500	Ω

NOTE: TYPICAL OPERATION data are obtained from direct measurement or by calculation from published characteristic curves. Adjustment of the rf grid voltage to obtain the specified plate current at the specified bias, screen and plate voltages is assumed. If this procedure is followed, there will be little variation in output power when the tube is changed, even though there may be some variation in grid and screen current. The grid and screen currents which result when the desired plate current is obtained are incidental and vary from tube to tube. These current variations cause no difficulty so long as the circuit maintains the correct voltage in the presence of the variations in current. In the case of Class C Service, if grid bias is obtained principally by means of a grid resistor, the resistor must be adjustable to obtain the required bias voltage when the correct rf grid voltage is applied.

RANGE VALUES FOR EQUIPMENT DESIGN

	Min.	Max.	
Filament: Current at 10.0 volts	9.7	11.2	A
Interelectrode Capacitances [1](grounded filament connection):			
Cin	13.0	17.0	pF
Cout	4.0	6.0	pF
Cgp	---	0.20	pF

1. In Shielded Fixture, per EIA Standard RS-191.

APPLICATION

MECHANICAL

MOUNTING - The 4-500A must be mounted vertically. The socket must be constructed so as to allow an unimpeded flow of air through the holes in the base of the tube and must also provide clearance for the glass tip-off which extends from the center of the base. The metal tube-base shell should be grounded by means of suitable spring fingers. The above requirements are met by the EIMAC SK-410 Air-System Socket. A flexible connecting strap should be provided between the EIMAC HR-6 cooler on the plate terminal and the external plate circuit. The tube must be protected from severe vibration and shock.

COOLING - Adequate forced-air cooling must be provided to maintain the base seals at a temperature below 200°C, and the plate seal at a temperature below 225°C.

When the EIMAC SK-410 Socket and SK-426 Chimney are used, a minimum air flow of 14 cubic feet per minute at a static pressure of 0.25 inches of water or less, as measured in the socket or plenum chamber at sea level, is required to provide adequate cooling under all conditions of operation. Seal temperature limitations may require that cooling air be supplied to the tube even when the filament alone is on during standby periods.

Tube temperatures may be measured with a temperature sensitive paint, spray or crayon, such as manufactured by Tempil Division, Big Three Industrial Gas & Equipment Co., Hamilton Blvd., So. Plainfield, N.J. 07080.

ELECTRICAL

FILAMENT VOLTAGE - Filament voltage should be measured at the tube base with an accurate meter. When operating at the nominal

voltage, variations of ±5% are tolerable and should have little effect on electrical performance of the tube. However, when very long life and consistent performance are factors, voltage can often be reduced to a value lower than the nominal voltage, but should be regulated and held to ±1% when this is done. To achieve a regulated voltage and still have it adjustable, a typical procedure would involve a one-to-one regulating transformer, feeding a variable ratio transformer (such as a POWERSTAT or a VARIAC), which in turn feeds the filament transformer. The equipment is first operated with nominal filament voltage applied, and when stable operation is achieved, the voltage is then reduced in small steps (about 0.2 volt at a time) until the point is reached where performance of the tube is clearly affected. The voltage is then raised to a few tenths of a volt above this level for operation. Periodically (every 500 to 1000 hours) this procedure should be repeated and the operating value of the filament voltage readjusted if necessary.

BIAS VOLTAGE - The dc bias voltage for the 4-500A should not exceed 500 volts. If grid resistor bias is used, suitable means must be provided to prevent excessive plate or screen dissipation in the event of loss of excitation, and the grid resistor should be made adjustable to facilitate maintaining the bias voltage and plate current at the desired values from tube to tube. In operation above 50 MHz, it is advisable to keep the bias voltage as low as is practicable.

SCREEN VOLTAGE - The dc screen voltage for the 4-500A should not exceed 1000 volts. The screen voltages shown under Typical Operation are representative voltages for the type of operation involved.

PLATE VOLTAGE - The plate-supply voltage for the 4-500A should not exceed 4000 volts in CW and audio applications. In plate-modulated telephony service the dc plate-supply voltage should not exceed 3200 volts, except below 30 MHz, intermittent service, where 4000 volts may be used.

GRID DISSIPATION - Grid dissipation for the 4-500A should not be allowed to exceed 12 watts. Grid dissipation may be calculated from the following expression:

$$P_g = e_{gk} \times I_c$$

where P_g = Grid dissipation
e_{gk} = Peak positive grid to cathode voltage, and
I_c = dc grid current

SCREEN DISSIPATION - The power dissipated by the screen of the 4-500A must not exceed 35 watts. Screen dissipation is likely to rise to excessive values when the plate voltage, bias voltage or plate load are removed with filament and screen voltages applied. Suitable protective means must be provided to limit screen dissipation to 35 watts in event of circuit failure.

PLATE DISSIPATION - Under normal operating conditions, the plate dissipation of the 4-500A should not be allowed to exceed 500 watts. The anode operates at a visibly red color at its maximum rated dissipation of 500 watts.

In plate modulated amplifier applications, the maximum allowable carrier-condition plate dissipation is 335 watts. The plate dissipation will rise to 500 watts under 100% sinusoidal modulation.

Plate dissipation in excess of the maximum rating is permissible for short periods of time, such as during tuning procedures.

MULTIPLE OPERATION - To obtain maximum power output with minimum distortion from tubes operated in multiple, it is desirable to adjust individual screen or grid bias voltages so that the peak plate current for each tube is equal at the crest of the exciting voltage. Under these conditions, individual dc plate currents will be approximately equal for full input signal for class AB1 operation.

CAUTION-GLASS IMPLOSION - The EIMAC 4-500A is pumped to a very high vacuum, which is contained by a glass envelope. When handling a glass tube, remember that glass is a relatively fragile material, and accidental breakage can result at any time. Breakage will result in flying glass fragments, so safety glasses, heavy clothing, and leather gloves are recommended for protection.

CAUTION-HIGH VOLTAGE - Operating voltage for the 4-500A can be deadly, so the equipment must be designed properly and operating precautions must be followed. Design equipment so that

no one can come in contact with high voltages. All equipment must include safety enclosures for high voltage circuits and terminals, with interlock switches to open the primary circuits of the power supply and to discharge high voltage capacitors whenever access doors are opened. Interlock switches must not be bypassed or "cheated" to allow operation with access doors open. Always remember that HIGH VOLTAGE CAN KILL.

INTERELECTRODE CAPACITANCE - The actual internal interelectrode capacitance of a tube is influenced by many variables in most applications, such as stray capacitance to the chassis, capacitance added by the socket used, stray capacitance between tube terminals, and wiring effects. To control the actual capacitance values within the tube, as the key component involved, the industry and the Military Services use a standard test procedure as described in Electronic Industries Association Standard RS-191. This requires the use of specially constructed test fixtures which effectively shield all external tube leads from each other and eliminates any capacitance reading to "ground". The test is performed on a cold tube. Other factors being equal, controlling internal tube capacitance in this way normally assures good interchangeability of tubes over a period of time, even when the tube may be made by different manufacturers. The capacitance values shown in the manufacturer's technical data, or test specifications, normally are taken in accordance with Standard RS-191.

The equipment designer is therefore cautioned to make allowance for the actual capacitance values which will exist in any normal application. Measurements should be taken with the socket and mounting which represent approximate final layout if capacitance values are highly significant in the design.

SPECIAL APPLICATION - If it is desired to operate this tube under conditions widely different from those listed here, write to Power Grid Tube Division, EIMAC Division of Varian, 301 Industrial Way, San Carlos, California 94070, for information and recommendations.

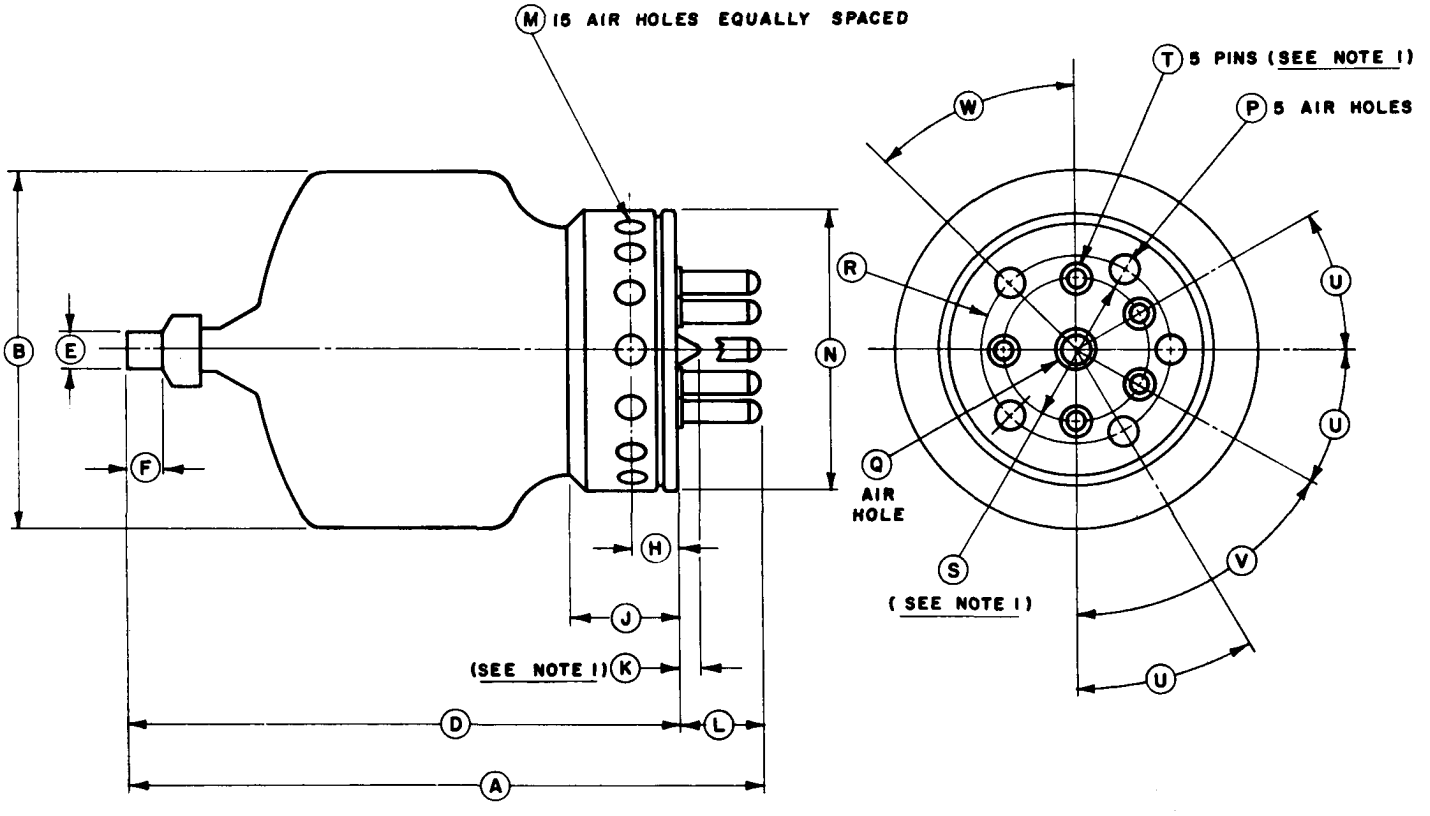

DIMENSIONAL DATA						
DIM.	INCHES			MILLIMETERS		
	MIN.	MAX.	REF.	MIN.	MAX.	REF.
A	6.500	7.000	- -	165.10	177.80	- -
B	- -	3.562	- -	- -	90.47	- -
D	5.750	6.250	- -	146.05	158.75	- -
E	0.350	0.365	- -	8.89	9.27	- -
F	0.328	- -	- -	8.33	- -	- -
H	- -	- -	0.468	- -	- -	11.89
J	- -	- -	1.125	- -	- -	28.57
K	- -	0.250	- -	- -	6.35	- -
L	- -	- -	0.750	- -	- -	19.05
M	- -	- -	0.250	- -	- -	6.35
N	- -	2.750	- -	- -	69.85	- -
P	- -	- -	0.312	- -	- -	7.92
Q	- -	- -	0.500	- -	- -	12.70
R	- -	- -	1.625	- -	- -	41.27
S	- -	- -	1.250	- -	- -	31.75
T	0.185	0.191	- -	4.70	4.85	- -
U	- -	- -	30°	- -	- -	30°
V	- -	- -	60°	- -	- -	60°
W	- -	- -	45°	- -	- -	45°

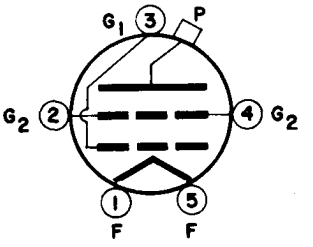

NOTES:

1. BASE PINS (T) & TUBULATION (K) ARE SO ALIGNED THAT THEY CAN BE FREELY INSERTED INTO A GAUGE 1/4 THICK WITH HOLE DIA'S OF .204 & .500 RESPECTIVELY LOCATED ON THE TRUE CENTERS BY THE GIVEN DIMENSIONS (V), (U) & (S).
2. REF. DIM'S ARE FOR INFO. ONLY & ARE NOT REQ'D FOR INSPECTION PURPOSES.

TYPICAL CONSTANT CURRENT CHARACTERISTICS

GROUNDED CATHODE — SCREEN VOLTAGE = 500V

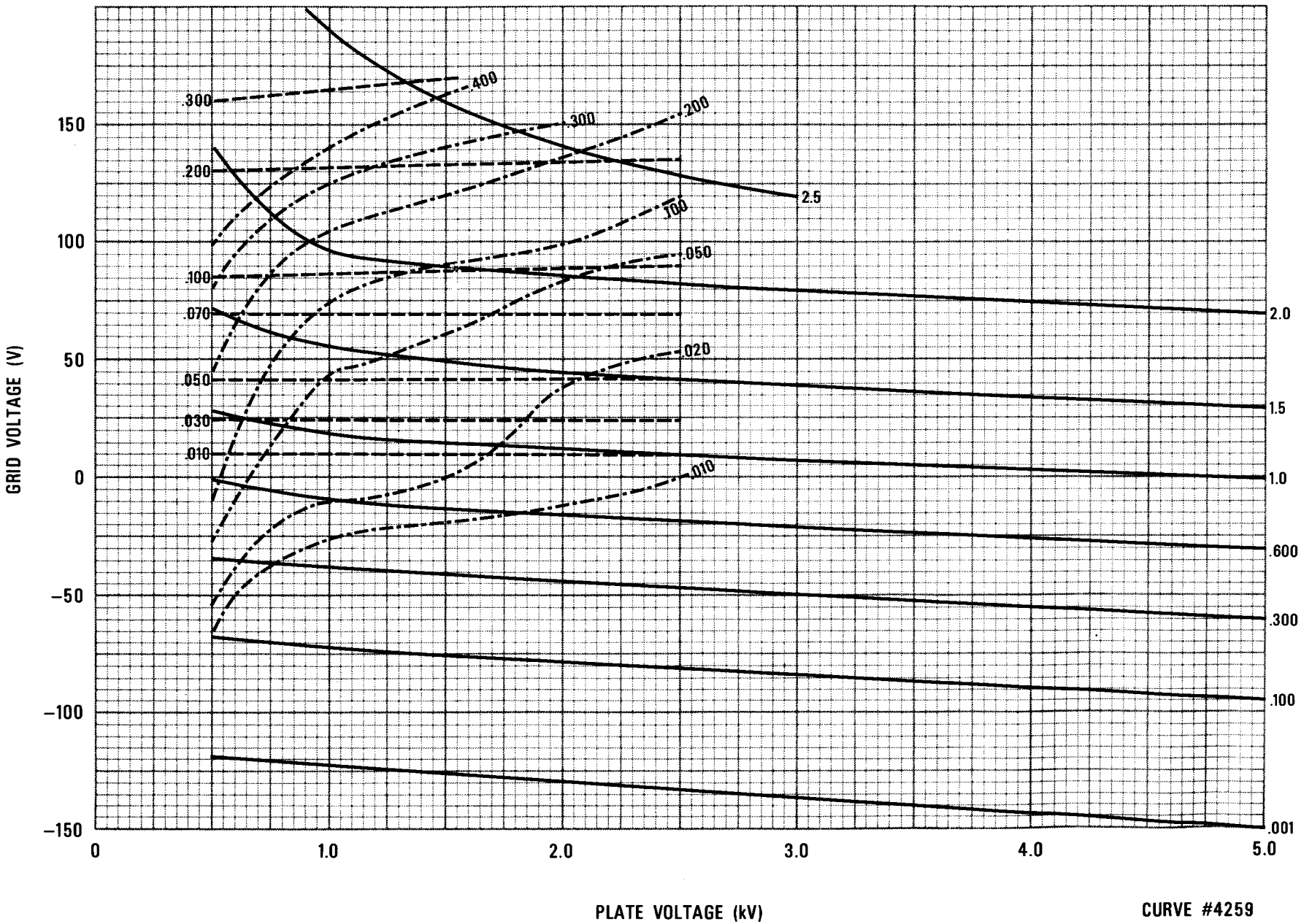

CURVE #4259

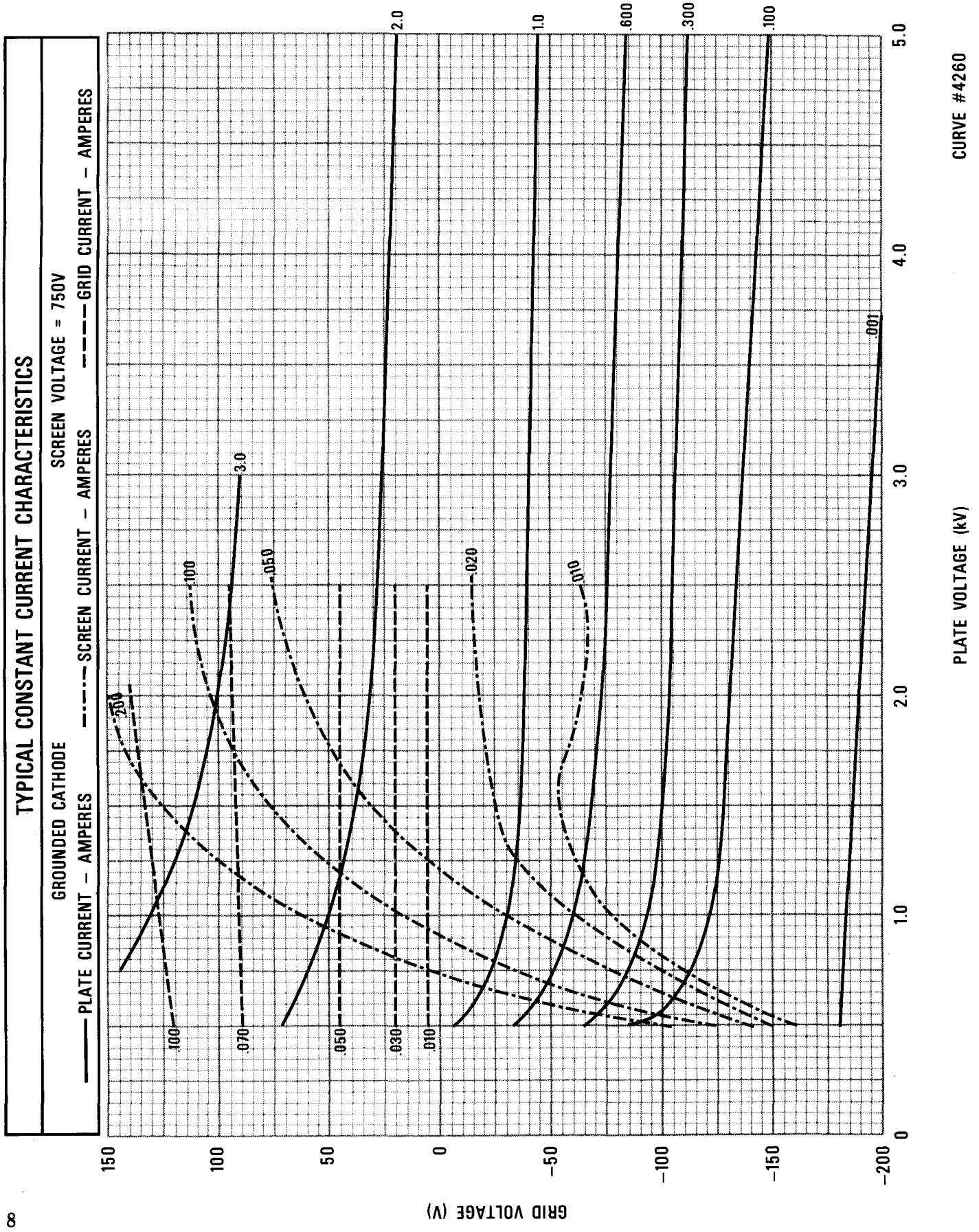
TYPICAL CONSTANT CURRENT CHARACTERISTICS
GROUNDED CATHODE
SCREEN VOLTAGE = 750V
PLATE CURRENT – AMPERES
SCREEN CURRENT – AMPERES
GRID CURRENT – AMPERES
GRID VOLTAGE (V)
PLATE VOLTAGE (kV)
CURVE #4260
150
100
50
0
-50
-100
-150
-200
0
1.0
2.0
3.0
4.0
5.0
2.0
1.0
.600
.300
.100
.001
3.0
.250
.100
.070
.050
.030
.010
.100
.050
.020
.010