—Standard Valves—

4308-B VALVE

TRIODE.

SPECIFICATION.

Cathode.

Thoriated tungsten filament.
Constant voltage type.

Base.

Extra large 4-pin bayonet.

Dimensions.

Overall length	13⅝″ (34·7 cms.)
Maximum diameter	3⅝″ (9·2 cms.)
Net weight	1·6 lbs. (725 gms.)

Constants.

Filament voltage	14 volts
Nominal filament current	6 amps.
Total emission	4 amps.
*Amplification factor	8
*Impedance	1,070 ohms.
*Mutual conductance	7·5 mA. per volt
Grid–anode capacity	17·4 $\mu\mu$F.
Grid–filament capacity	13·6 $\mu\mu$F.
Anode–filament capacity	9·3 $\mu\mu$F.

* *at* Vp = 1,500 *volts*, Vg = —150 *volts*.

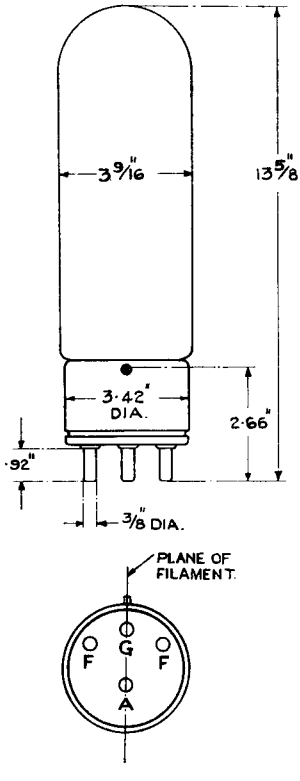

LIMITING CONDITIONS FOR SAFE OPERATION.

Maximum direct anode voltage	2,250 volts
Maximum direct anode current	325 mA.
Maximum direct grid current	75 mA.
Maximum anode dissipation	250 watts
Maximum frequency for above ratings	1·5 Mc.
Maximum anode voltage for frequency of 4·5 Mc.	750 volts

Tentative data

—Standard Valves—

TYPICAL OPERATING CONDITIONS.

	Class A AF. Amp or Mod.	
Direct anode voltage	1,500	1,000 volts
Grid bias	—155	—80 volts
Direct anode current	135	210 mA.
Load impedance	13,000	3,000 ohms
Undistorted output	50	35 watts

	Class B. A.F. Amp or Mod. For balanced 2 valve circuit.	
Direct anode voltage	1,750	1,500 volts
Grid bias	—215	—180 volts
Direct anode current per valve—Zero signal	30	25 mA.
Maximum signal	300	300 mA.
Anode dissipation	240	210 watts
Load resistance—anode to anode	5,200	4,280 watts
Power output—2 valves	575	475 watts
Recommended power for driving stage	35	35 watts

RADIO FREQUENCY OPERATION.

	Class B Telephony		Class C Telephony		Class C Telegraphy	
	Modulated carrier applied to grid		Subject to anode modulated		Unmodulated	
Direct anode voltage	1,750	1,500	1,250	1,000	1,750	1500 volts
Direct anode current	215	250	300	300	300	300 mA.
Grid bias	—230	—200	—320	—260	—345	—300 to —400 volts
Anode dissipation	250	250	125	100	175	150 watts
Carrier output	125	125	250	200	350	300 watts

PRINTED IN ENGLAND

—Standard Valves—

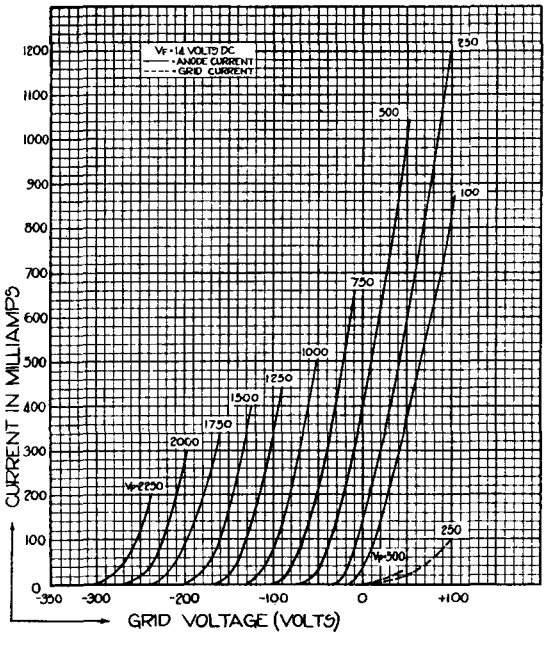

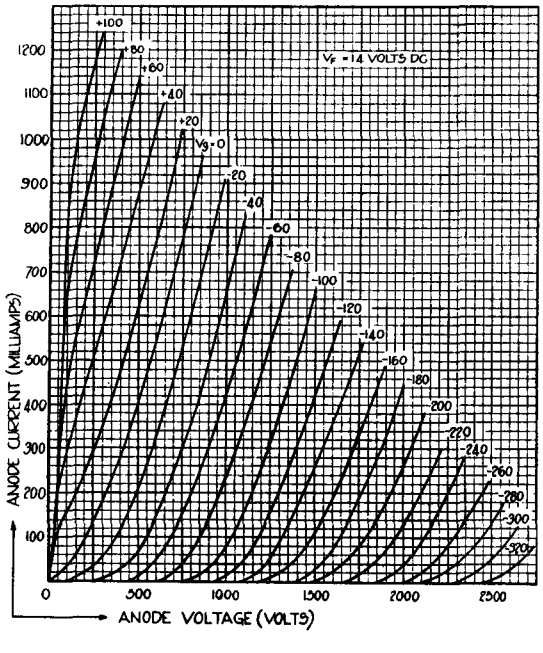

Tentative Data

PRINTED IN
ENGLAND