GE Electronic TUBE
KEN-RAD

42

Description and Rating

POWER-AMPLIFIER PENTODE

GENERAL DESCRIPTION

Principal Application: The 42 is a heater-cathode type pentode amplifier tube designed for use as a power-amplifier in the audio-output stage of a-c or battery-operated equipment. Electrically the 42, 6F6 and 6F6-GT are identical and the 42 and 2A5 are the same except for heater rating.

Cathode:	Coated Unipotential
Heater Voltage (A-C or D-C)	6.3 Volts
Heater Current	0.7 Ampere
Envelope:	ST-14 Glass
Base:	A6-12 Medium 6-Pin Phenolic
Mounting Position:	Any

PHYSICAL DIMENSIONS

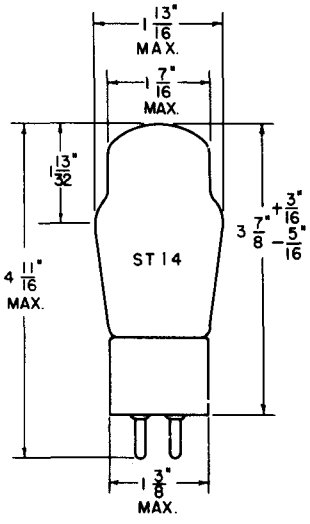

RMA 14-1

TERMINAL CONNECTIONS

Pin 1 - Heater
Pin 2 - Plate
Pin 3 - Grid No. 2 (Screen)
Pin 4 - Grid Number 1
Pin 5 - Cathode and Grid No. 3
Pin 6 - Heater

BASING DIAGRAM

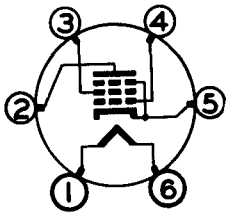

RMA 6B
BOTTOM VIEW

MAXIMUM RATINGS

	Pentode Design Center	Pentode Absolute	Triode § Design Center	Triode § Absolute	
Plate Voltage	375	415	350	385	Volts
Screen (Grid No. 2) Voltage	285	315	---	---	Volts
Screen Supply Voltage	375	415	---	---	Volts
Plate Dissipation	11.0	12.1	10	11	Watts
Screen Dissipation	3.75	4.13	---	---	Watts
D-C Heater-Cathode Voltage	90	100	90	100	Volts

§ *With grid number 2 (screen) connected to plate.*

CHARACTERISTICS AND TYPICAL OPERATION

CLASS A AMPLIFIER - PENTODE CONNECTION

	Fixed Bias		Cathode Bias		
Heater Voltage	6.3	6.3	6.3	6.3	Volts
Plate Voltage	250	285	250	285	Volts
Screen Voltage	250	285	250	285	Volts
Grid Bias Voltage **	-16.5	-20	---	---	Volts
Cathode Bias Resistor	---	---	410	440	Ohms
Peak A-F Grid Voltage	16.5	20	16.5	20	Volts
Plate Resistance (Approx)	80000	78000	---	---	Ohms
Transconductance	2500	2550	---	---	Micromhos
Zero-Signal Plate Current	34	38	34	38	Milliamperes
Zero-Signal Screen Current	6.5	7.0	6.5	7.0	Milliamperes
Maximum-Signal Plate Current	36	40	35	38	Milliamperes
Maximum-Signal Screen Current	10.5	13	9.7	12	Milliamperes
Load Resistance	7000	7000	7000	7000	Ohms
Total Harmonic Distortion	8	9	8.5	9	Per Cent
Maximum-Signal Power Output	3.2	4.8	3.1	4.5	Watts

CLASS A AMPLIFIER - TRIODE CONNECTION §

	Fixed Bias	Cathode Bias	
Heater Voltage	6.3	6.3	Volts
Plate Voltage	250	250	Volts
Grid Bias Voltage **	-20	---	Volts
Cathode Bias Resistor	---	650	Ohms
Peak A-F Grid Voltage	20	20	Volts
Plate Resistance (Approx)	2600	---	Ohms
Transconductance	2600	---	Micromhos
Zero-Signal Plate Current	31	31	Milliamperes
Maximum-Signal Plate Current	34	32	Milliamperes
Load Resistance	4000	4000	Ohms
Total Harmonic Distortion	6.5	6.5	Per Cent
Maximum-Signal Power Output	0.85	0.80	Watt

PUSH-PULL CLASS A AMPLIFIER - PENTODE CONNECTION ##

	Fixed Bias	Cathode Bias	
Heater Voltage	6.3	6.3	Volts
Plate Voltage	315	315	Volts
Screen Voltage	285	285	Volts
Grid Bias Voltage **	-24	---	Volts
Cathode Bias Resistor	---	320	Ohms
Peak A-F Grid to Grid Voltage	48	58	Volts
Zero-Signal Plate Current	62	62	Milliamperes
Zero-Signal Screen Current	12	12	Milliamperes
Maximum-Signal Plate Current	80	73	Milliamperes
Maximum-Signal Screen Current	19.5	18	Milliamperes
Effective Load Resistance (Plate to Plate)	10000	10000	Ohms
Total Harmonic Distortion	4	3	Per Cent
Maximum-Signal Power Output	11	10.5	Watts

§ *With grid number 2 (screen) connected to plate.*

** *The d-c resistance in the grid circuit, under maximum rated conditions, should not exceed 0.1 megohm for fixed bias operation and 0.5 megohm for cathode bias operation.*

Unless otherwise specified the values given are for two tubes.

PUSH-PULL CLASS AB_2 AMPLIFIER ##

	Pentode Connection Fixed Bias	Pentode Connection Cathode Bias	Triode Connection § Fixed Bias	Triode Connection § Cathode Bias	
Heater Voltage	6.3	6.3	6.3	6.3	Volts
Plate Voltage	375	375	350	350	Volts
Screen Voltage	250	250	---	---	Volts
Grid Bias Voltage **	-26	---	-38	---	Volts
Cathode Bias Resistor	---	340	---	730	Ohms
Peak A-F Grid to Grid Voltage	82	94	123	132	Volts
Zero-Signal Plate Current	34	54	48	50	Milliamperes
Zero-Signal Screen Current	5	8	---	---	Milliamperes
Maximum-Signal Plate Current	82	77	92	60	Milliamperes
Maximum-Signal Screen Current	19.5	18	---	---	Milliamperes
Effective Load Resistance (Plate to Plate)	10000	10000	6000	10000	Ohms
Total Harmonic Distortion	3.5	5	2	3	Per Cent
Maximum-Signal Power Output	18.5	19	13	9	Watts

§ *With grid number 2 (screen) connected to plate.*

** *The d-c resistance in the grid circuit, under maximum rated conditions, should not exceed 0.1 megohm for fixed bias operation and 0.5 megohm for cathode bias operation.*

Unless otherwise specified the values given are for two tubes.

AVERAGE PLATE CHARACTERISTICS

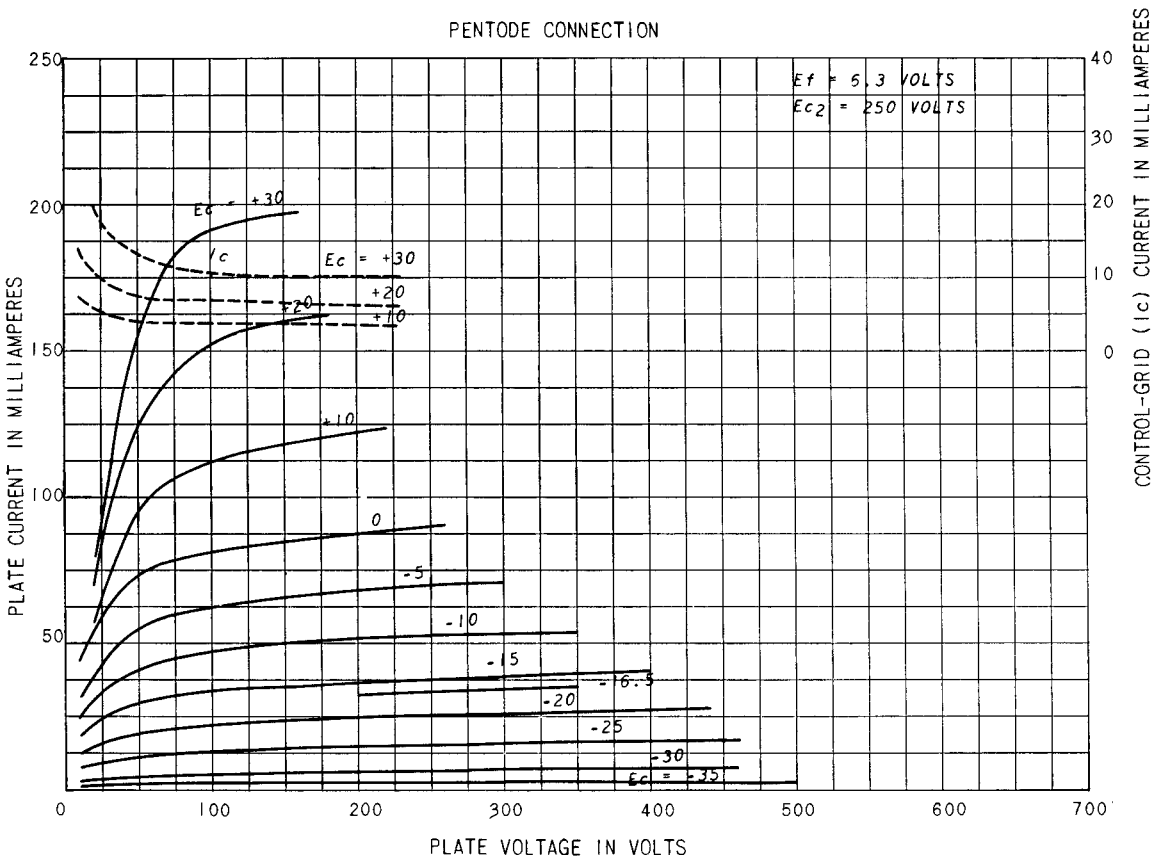

AVERAGE PLATE CHARACTERISTICS

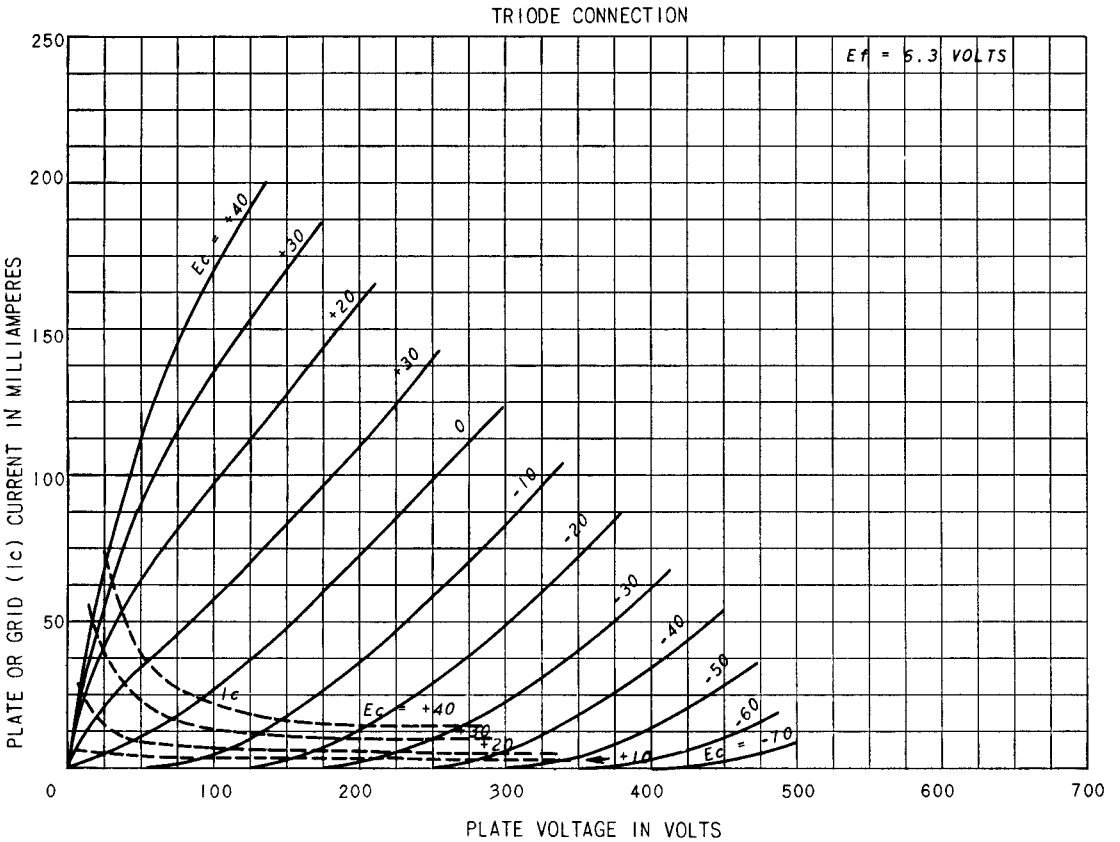

Electronics Department

GENERAL ELECTRIC

Schenectady, N. Y.