4-125A

(4D21)
RADIAL-BEAM POWER TETRODE
•
MODULATOR OSCILLATOR AMPLIFIER

TECHNICAL DATA

The EIMAC 4-125A is a radial-beam power tetrode intended for use as an amplifier, oscillator, or modulator. It has a maximum plate-dissipation rating of 125 watts and a maximum plate-voltage rating of 3000 volts at frequencies up to 120 MHz.

The low grid-plate capacitance of this tetrode together with its low driving-power requirement allows considerable simplification of the associated circuit and driver stage.

Cooling is by radiation from the plate and by air circulation through the base and around the envelope.

The 4-125A in class-C rf service will deliver up to 375 watts plate power output with 1.2 watts nominal driving power.

GENERAL CHARACTERISTICS

ELECTRICAL

Filament: Thoriated Tungsten		
Voltage	5.0	volts
Current	6.5	amperes
Grid-Screen Amplification Factor (Average)	5.9	
Direct Interelectrode Capacitances (Average)		
Grid-Plate	0.05	pF
Input	10.8	pF
Output	3.1	pF
Transconductance (I_b=50 mA, E_b=2500 V, E_{c2}=400 V)	2450	μmhos
Highest Frequency for Maximum Ratings	120	MHz

MECHANICAL

Base	5-pin metal shell
Basing	See outline drawing
Socket	E. F. Johnson Co. socket No. 122-275, National Co. No.HX-100, or equivalent
Mounting Position	Vertical, base down or up
Cooling	Radiation and forced air
Recommended Heat-Dissipating Plate Connector	EIMAC HR-6
Maximum Over-all Dimensions:	
Length	5.69 inches
Diameter	2.1 inches
Net Weight	6.5 ounces
Shipping Weight	1.5 pounds

(Revised 6-1-67) © 1958, 1967 by Varian

Printed in U.S.A.

RADIO-FREQUENCY POWER AMPLIFIER AND OSCILLATOR

Class-C Telegraphy or FM Telephony
(Key-down condition, 1 tube)

MAXIMUM RATINGS

DC Plate Voltage[1]	3000 volts
DC Screen Voltage	400 volts
DC Grid Voltage	−500 watts
DC Plate Current	225 mA
Plate Dissipation	125 watts
Screen Dissipation	20 watts
Grid Dissipation	5 watts

TYPICAL OPERATION

(Frequencies below 120 MHz)

DC Plate Voltage	2000	2500	3000	volts
DC Screen Voltage	350	350	350	volts
DC Grid Voltage	−100	−150	−150	volts
DC Plate Current	200	200	167	mA
DC Screen Current	50	40	30	mA
DC Grid Current	12	12	9	mA
Screen Dissipation	18	14	10.5	watts
Grid Dissipation	1.6	2	1.2	watts
Peak RF Grid Input Voltage (approx.)	230	320	280	volts
Driving Power (approx.)[3]	2.8	3.8	2.5	watts
Plate Power Input	400	500	500	watts
Plate Dissipation	125	125	125	watts
Plate Power Output	275	375	375	watts

AUDIO-FREQUENCY POWER AMPLIFIER AND MODULATOR

Class-AB_1

MAXIMUM RATINGS

DC Plate Voltage	3000 volts
DC Screen Voltage	600 volts
Max-Signal DC Plate Current, per Tube	225 mA
Plate Dissipation, per Tube	125 watts
Screen Dissipation, per Tube	20 watts

TYPICAL OPERATION

(Sinusoidal wave, two tubes unless otherwise specified)

DC Plate Voltage	1500	2000	2500	volts
DC Screen Voltage	600	600	600	volts
DC Grid Voltage[2]	−90	−94	−96	volts
Zero-Signal DC Plate Current	60	50	50	mA
Max-Signal DC Plate Current	222	240	232	mA
Zero-Signal DC Screen Current	−1.0	−0.5	−0.3	mA
Max-Signal DC Screen Current	17	6.4	8.5	mA
Effective Load, Plate-to-Plate	10,200	13,400	20,300	ohms
Peak, AF Grid Input Voltage (per tube)	90	94	96	volts
Driving Power	0	0	0	watts
Max-Signal Plate Dissipation (per tube)	87.5	125	125	watts
Max-Signal Plate Power Output	158	230	330	watts
Total Harmonic Distortion	5	2	2.6	per ct.

HIGH-LEVEL MODULATED RADIO-FREQUENCY AMPLIFIER

Class-C Telephony
(Carrier conditions unless otherwise specified, 1 tube)

MAXIMUM RATINGS

DC Plate Voltage[1]	2500 volts
DC Screen Voltage	400 volts
DC Grid Voltage	−500 watts
DC Plate Current	200 mA
Plate Dissipation	85 watts
Screen Dissipation	20 watts
Grid Dissipation	5 watts

TYPICAL OPERATION

(Frequencies below 120 MHz)

DC Plate Voltage	2000	2500	volts
DC Screen Voltage	350	350	volts
DC Grid Voltage	−220	−210	volts
DC Plate Current	150	152	mA
DC Screen Current	33	30	mA
DC Grid Current	10	9	mA
Screen Dissipation	11.5	10.5	watts
Grid Dissipation	1.6	1.4	watts
Peak AF Screen Voltage, 100% Modulation	210	210	volts
Peak RF Grid Input Voltage (approx.)	375	360	volts
Driving Power (approx.)[3]	3.8	3.3	watts
Plate Power Input	300	380	watts
Plate Dissipation	75	80	watts
Plate Power Output	225	300	watts

AUDIO-FREQUENCY POWER AMPLIFIER AND MODULATOR

Class-AB_2

MAXIMUM RATINGS

DC Plate Voltage	300 volts
DC Screen Voltage	400 volts
Max-Signal DC Plate Current, per Tube	225 mA
Plate Dissipation, per Tube	125 watts
Screen Dissipation, per Tube	20 watts

TYPICAL OPERATION

(Sinusoidal wave, two tubes unless otherwise specified)

DC Plate Voltage	1500	2000	2500	volts
DC Screen Voltage	350	350	350	volts
DC Grid Voltage	−41	−45	−43	volts
Zero-Signal DC Plate Current	87	72	93	mA
Max-Signal DC Plate Current	400	300	260	mA
Zero-Signal DC Screen Current	0	0	0	mA
Max-Signal DC Screen Current	34	5	6	mA
Effective Load, Plate-to-Plate	7200	13,600	22,200	ohms
Peak AF Grid Input Voltage (per tube)	141	105	89	volts
Max-Signal Avg. Driving Power (approx.)	2.5	1.4	1	watts
Max-Signal Peak Driving Power	5.2	3.1	2.4	watts
Max-Signal Plate Dissipation (per tube)	125	125	122	watts
Max-Signal Plate Power Output	350	350	400	watts
Total Harmonic Distortion	2.5	1	2.2	per ct.

(1) Above 120 MHz the maximum plate voltage rating depends upon frequency. See page 4.

(2) The effective grid circuit resistance for each tube must not exceed 250,000 ohms.

(3) Driving power increases above 70 MHz. See page 4.

IF IT IS DESIRED TO OPERATE THIS TUBE UNDER CONDITIONS WIDELY DIFFERENT FROM THOSE GIVEN UNDER "TYPICAL OPERATION" POSSIBLY EXCEEDING THE MAXIMUM RATINGS GIVEN FOR CW SERVICE, WRITE EIMAC DIVISION OF VARIAN ASSOCIATES, FOR INFORMATION AND RECOMMENDATIONS

APPLICATION

MECHANICAL

Mounting—The 4-125A must be mounted vertically, base down or base up. The socket must be constructed so as to allow an unimpeded flow of air through the holes in the base of the tube and must also provide clearance for the glass tip-off which extends from the center of the base. The tube should be mounted above the chassis deck to allow free circulation of air in the manner shown in the mounting diagram below. The above requirements are met by the E. F. Johnson Co. socket No. 122-275, the National Co. socket No. HX-100, or a similar socket.

A flexible connecting strap should be provided between the HR-6 Heat Dissipating Plate Connector on the plate terminal and the external circuit. The tube must be protected from severe vibration and shock.

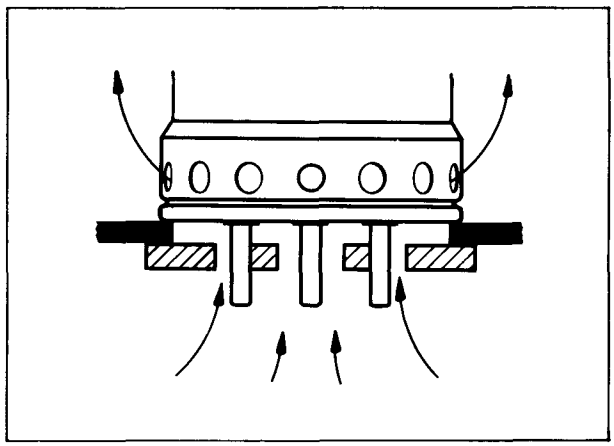

4-125A mounting providing base cooling, shielding and isolation of output and input compartments.

Cooling—Adequate cooling must be provided for the seals and envelope of the 4-125A. In continuous-service applications, the temperature of the plate seal, as measured on the top of the plate cap, should not exceed 170° C. A relatively slow movement of air past the tube is sufficient to prevent seal temperatures in excess of maximum at frequencies below 30 MHz. At frequencies above 30 MHz, radio frequency losses in the leads and envelope contribute to seal and envelope heating, and special attention should be given to cooling. A small fan or centrifugal blower directed toward the upper portion of the envelope will usually provide sufficient circulation for cooling at frequencies above 30 MHz, however.

In intermittent-service applications where the "on" time does not exceed a total of five minutes in any ten-minute period, plate seal temperatures as high as 220° C. are permissible. When the ambient temperature does not exceed 30° C. it will not ordinarily be necessary to provide forced cooling to hold the temperatures below this maximum at frequencies below 30 MHz, provided that a heat-dissipating plate connector is used, and the tube is so located that normal circulation of air past the envelope is not impeded.

Provision must be made for circulation of air through the base of the tube. Where shielding or socket design makes it impossible to allow free circulation of air through the base, it will be necessary to apply forced-air cooling to the stem structure. An air flow of two cubic feet per minute through the base will be sufficient for stem cooling.

ELECTRICAL

Filament Voltage— For maximum tube life the filament voltage, as measured directly at the filament pins, should be the rated value of 5.0 volts. Unavoidable variations in filament voltage must be kept within the range from 4.75 to 5.25 volts.

Bias Voltage— Dc bias voltage for the 4-125A should not exceed 500 volts. If grid-leak bias is used, suitable protective means must be provided to prevent excessive plate or screen dissipation in the event of loss of excitation.

Screen Voltage— The dc screen voltage for the 4-125A should not exceed 400 volts, except for class-AB audio operation.

Plate Voltage—The plate-supply voltage for the 4-125A should not exceed 3000 volts for frequencies below 120 MHz. The maximum permissible plate voltage is less than 3000 volts above 120 MHz, as shown by the graph on page 5.

Grid Dissipation—Grid dissipation for the 4-125A should not be allowed to exceed five watts. Grid dissipation may be calculated from the following expression:

$$P_g = e_{cmp} I_c$$

where P_g = Grid dissipation,
e_{cmp} = Peak positive grid voltage, and
I_c = D-c grid current.

e_{cmp} may be measured by means of a suitable peak voltmeter connected between filament and grid.

Screen Dissipation—The power dissipated by the screen of the 4-125A must not exceed 20 watts. Screen dissipation is likely to rise to excessive values when the plate voltage, bias voltage or plate load are removed with filament and screen voltages applied. Suitable protective means must be provided to limit screen dissipation to 20 watts in the event of circuit failure.

Plate Dissipation—Under normal operating conditions, the plate dissipation of the 4-125A should not be allowed to exceed 125 watts in unmodulated applications.

In high-level-modulated amplifier applications, the maximum allowable carrier-condition plate dissipation is 85 watts. The plate dissipation will rise to 125 watts under 100% sinusoidal modulation.

Plate dissipation in excess of the maximum rating is permissible for short periods of time, such as during tuning procedures.

OPERATION

Class-C Telegraphy or FM Telephony—The 4-125A may be operated as a class-C telegraph or FM telephone amplifier without neutralization up to about 30 MHz if reasonable precautions are taken to prevent coupling between input and output circuits external to the tube. A grounded metallic plate on which the socket may be mounted as shown in the mounting diagram on page three provides an effective isolating shield between grid and plate circuits. In single-ended circuits, plate, grid, filament and screen by-pass capacitors should be returned through the shortest possible leads to a common chassis point. In push-pull applications the filament and screen terminals of each tube should be by-passed to a common chassis point by the shortest possible leads, and short, heavy leads should be used to interconnect the screens and filaments of the two tubes. Care should be taken to prevent leakage of radio-frequency energy to leads entering the amplifier, to prevent grid-plate coupling between these leads external to the amplifier.

Where shielding is adequate, the feed-back at frequencies above 100 MHz is due principally to screen-lead-inductance effects, and it becomes necessary to introduce in-phase voltage from the plate circuit into the grid circuit. This can be done by adding capacitance between plate and grid external to the tube. Ordinarily, a small metal tab approximately ¾-inch square connected to the grid terminal and located adjacent to the envelope opposite the plate will suffice for neutralization. Means should be provided for adjusting the spacing between the neutralizing capacitor plate and the envelope, but care must be taken to prevent the neutralizing plate from touching the envelope. An alternative neutralization scheme is illustrated in the diagram below. In this circuit feed-back is eliminated by series-tuning the screen to ground with a small capacitor. The socket screen terminals should be strapped together, as shown on the diagram, by the shortest possible lead, and the leads from the screen terminal to the capacitor, C, and from the capacitor to ground should be made as short as possible. All connections to the screen terminals should be made to the center of the strap between the terminals, in order to equalize the current in the two screen leads and prevent overheating one of them. The value for C given under the diagram presupposes the use of the shortest possible leads.

At frequencies below 100 MHz ordinary neutralization systems may be used. With reasonably effective shielding, however, neutralization should not be required below about 30 MHz.

The driving power and power output under typical operating conditions, with maximum output and plate voltage, are shown on page 5. The power output shown is the actual plate power delivered by the tube; the power delivered to the load will depend upon the efficiency of the plate tank and output coupling system. The driving power is likewise the driving power required by the tube (includes bias loss). The driver output power should exceed the driving power requirement by a sufficient margin to allow for coupling-circuit losses. These losses will not ordinarily amount to more than 30 or 40 per cent of the driving power, except at frequencies above 150 MHz. The use of silver-plated linear tank-circuit elements is recommended at frequencies above 100 MHz.

Conventional capacitance-shortened quarter-wave linear grid tank circuits having a calculated Z_0 of 160 ohms or less may be used with the 4-125A up to 175 MHz. Above 175 MHz linear grid tank circuits employing a "capacitor"-type shortening bar, as illustrated in the diagram below, may be used. The capacitor, C_1, may consist of two silver-plated brass plates one inch square with a piece of .010 inch mica or polystyrene as insulation.

Class-C AM Telephony—The rf circuit considerations discussed above under Class-C Telegraphy or FM Telephony also apply to amplitude-modulated operation of the 4-125A. When the 4-125A is used as a class-C high-level-modulated amplifier, modulation should be applied to both plate and screen. Modulation voltage for the screen may be obtained from a separate winding on the modulation transformer, by supplying the screen voltage via a series dropping resistor from the unmodulated plate supply, or by the use of an audio-frequency reactor in the positive screen-supply lead. When screen modulation is obtained by either the series-resistor or the audio-reactor method, the audio-frequency variations in screen current which result from variations in plate voltage as the plate is modulated automatically give the required screen modulation. Where a reactor is used, it should have a rated inductance of not less than 10 henries divided by the number of tubes in the modulated amplifier and a maximum current rating of two or three times the operating dc screen current. To prevent phase shift between the screen and plate modulation voltages at high audio frequencies, the screen by-pass capacitor should be no larger than necessary for adequate rf by-passing. Where screen voltage is obtained from a separate winding on the modulation transformer, the screen winding should be designed to deliver the peak screen modulation voltage given in the typical operating data on page 2.

For high-level modulated service, the use of partial grid-leak bias is recommended. Any by-pass capacitors placed across the grid-leak resistance should have a reactance at the highest modulation frequency equal to at least twice the grid-leak resistance.

Class-AB_1 and Class-AB_2 Audio— Two 4-125A's may be used in a push-pull circuit to give relatively high audio output power at low distortion. Maximum ratings and typical operating conditions for class-AB_1 and class-AB_2 audio operation are given in the tabulated data.

When type 4-125A tubes are used as class-AB_1, or class-AB_2 audio amplifiers at 1500 plate volts, under the conditions given under "Typical Operation," the screen voltage must be obtained from a source having reasonably good regulation, to prevent variations in screen voltage from zero-signal to maximum-signal conditions. The use of voltage regulator tubes in a standard circuit will provide adequate regulation. The variation in screen current at plate voltages of 2000 and above is low enough so that any screen power supply having a normal order

of regulation will serve. The driver plate supply makes a convenient source of screen voltage under these conditions.

Grid bias voltage for class-AB_2 service may be obtained from batteries or from a small fixed-bias supply. When a bias supply is used, the dc resistance of the bias source should not exceed 250 ohms. Under class-AB_1 conditions the effective grid-circuit resistance for each tube should not exceed 250,000 ohms.

The peak driving power figures given in the class-AB_2 tabulated data are included to make possible an accurate determination of the required driver output power. The driving amplifier must be capable of supplying the peak driving power without distortion. The driver stage should, therefore, be capable of providing an undistorted average output equal to half the peak driving power requirement. A small amount of additional driver output should be provided to allow for losses in the coupling transformer.

The power output figures given in the tabulated data refer to the total power output from the amplifier tubes. The useful power output will be from 5 to 15 per cent less than the figures shown, due to losses in the output transformer.

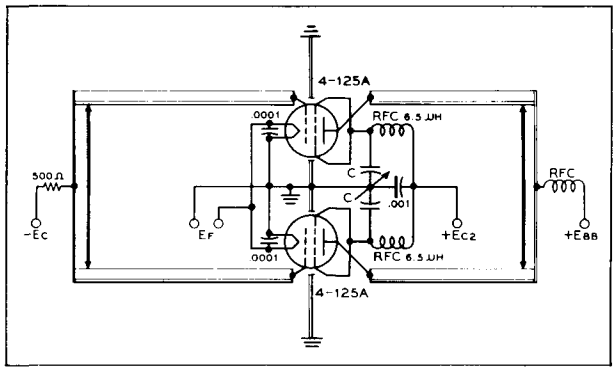

Screen-tuning neutralization circuit for use above 100 Mc. C is a small split-stator capacitor.

$$C(\mu\mu fd) = \frac{640{,}000}{f^2\ (Mc.)}\text{, approx.}$$

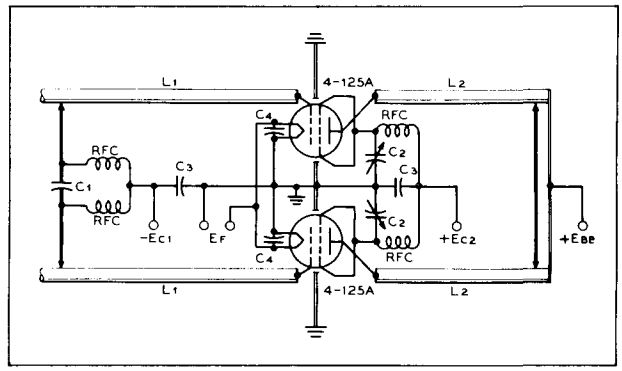

Typical circuit arrangement useful for frequencies above 175 Mc.

C_1—See above.
C_2—Neutralizing capacitor.
C_3—.001 μfd.
C_4—100 $\mu\mu$fd.
L_1—3/8" dia. copper spaced 1" center-to-center, 6" long.
L_2—7/8" dia. brass, silver plated, spaced 1 1/2" center-to-center, 14" long.

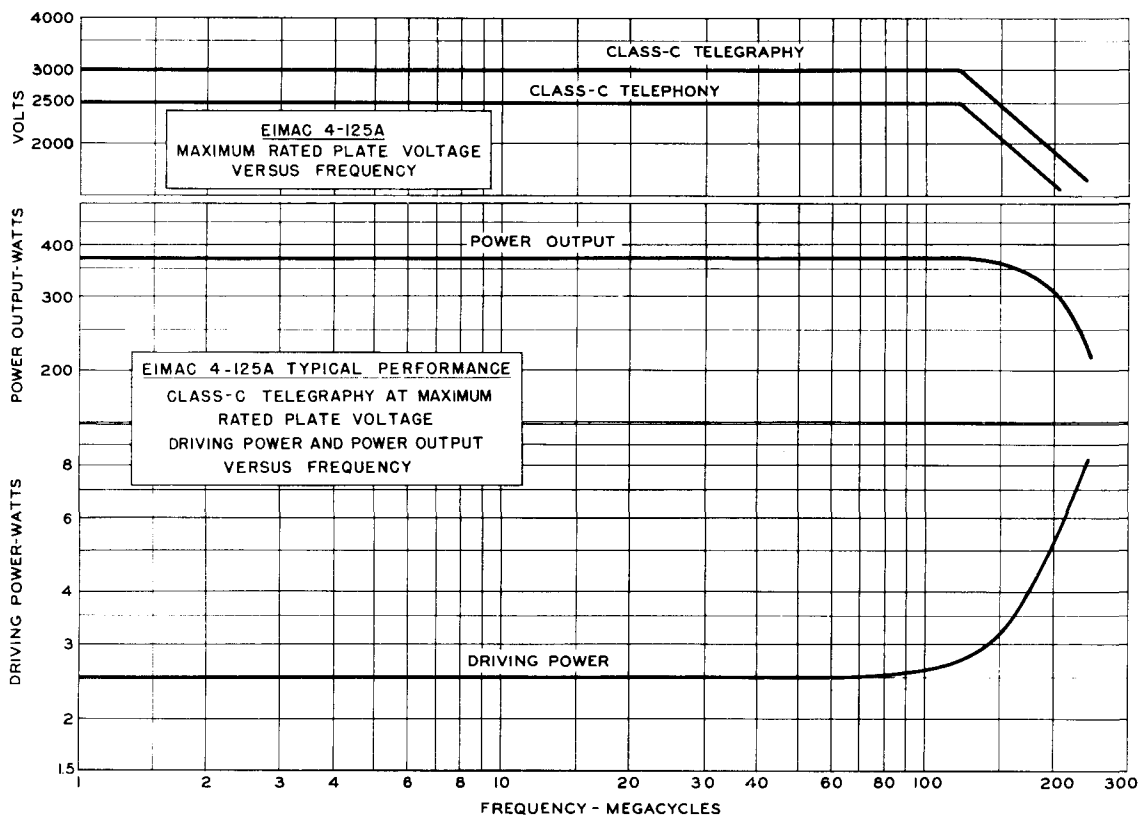

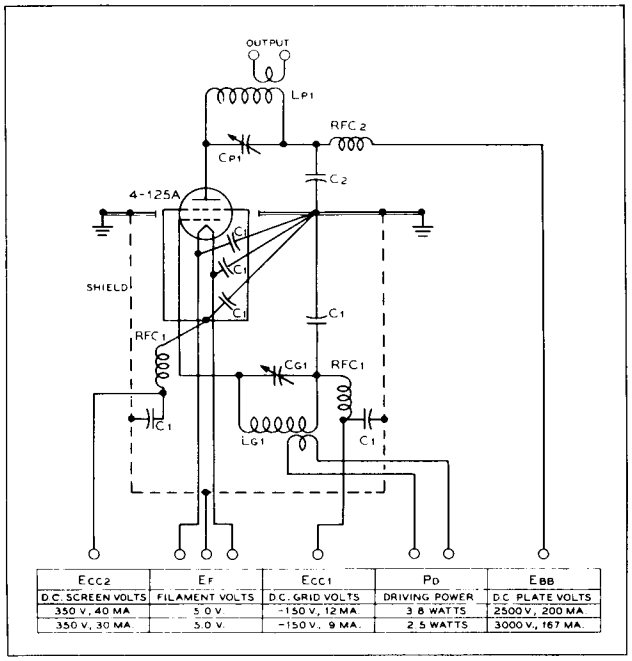

E_{CC2}	E_F	E_{CC1}	P_D	E_{BB}
D.C. SCREEN VOLTS	FILAMENT VOLTS	D.C. GRID VOLTS	DRIVING POWER	D.C. PLATE VOLTS
350 V., 40 MA.	5.0 V.	-150 V., 12 MA.	3.8 WATTS	2500 V., 200 MA.
350 V., 30 MA.	5.0 V.	-150 V., 9 MA.	2.5 WATTS	3000 V., 167 MA.

Typical radio-frequency power amplifier circuit, Class-C telegraphy, 500 watts input.

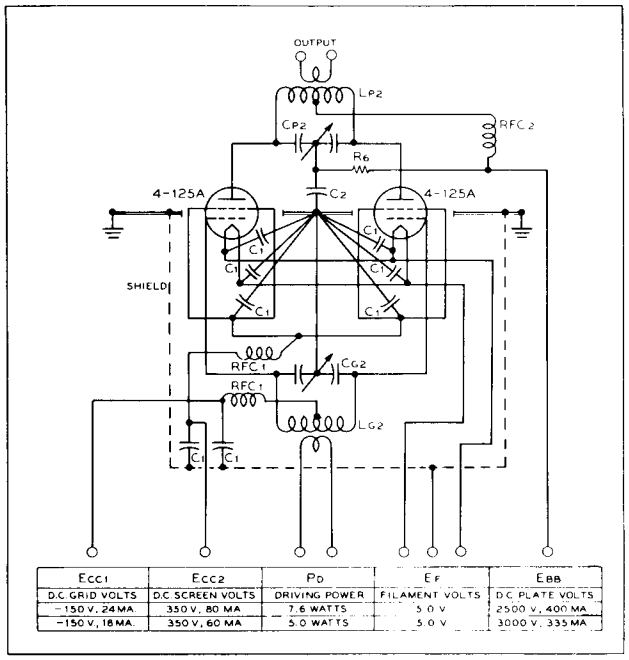

E_{CC1}	E_{CC2}	P_D	E_F	E_{BB}
D.C. GRID VOLTS	D.C. SCREEN VOLTS	DRIVING POWER	FILAMENT VOLTS	D.C. PLATE VOLTS
-150 V., 24 MA.	350 V., 80 MA.	7.6 WATTS	5.0 V.	2500 V., 400 MA.
-150 V., 18 MA.	350 V., 60 MA.	5.0 WATTS	5.0 V.	3000 V., 335 MA.

Typical radio-frequency power amplifier circuit, Class-C telegraphy, 1000 watts input.

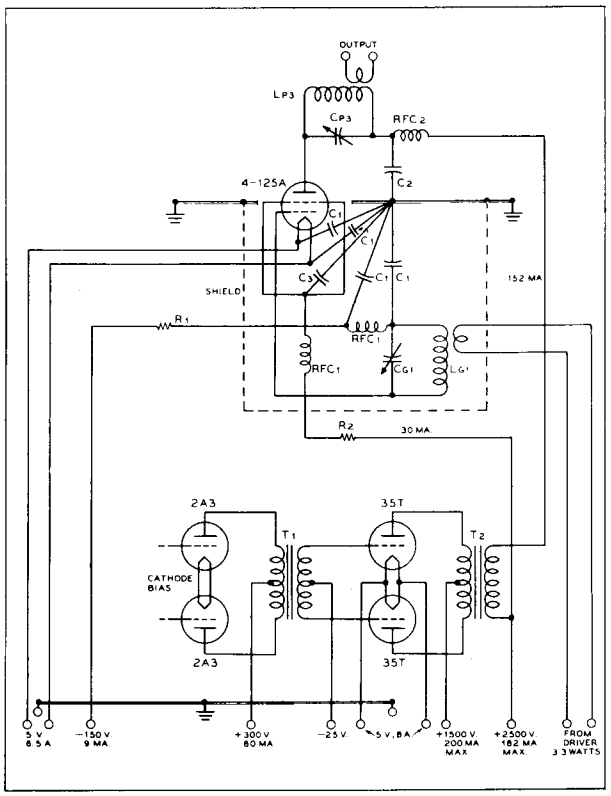

Typical high-level-modulated r-f amplifier circuit, with modulator and driver stages, 380 watts plate input.

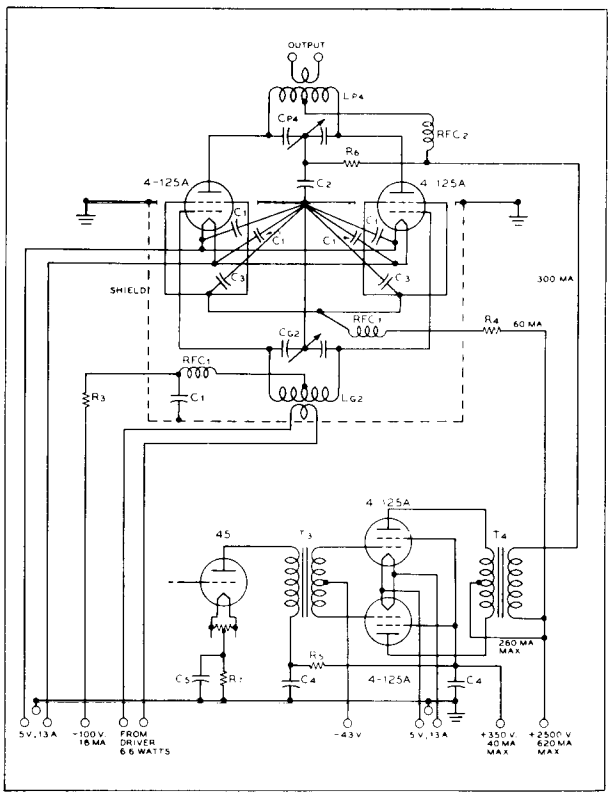

Typical high-level-modulated r-f amplifier circuit, with modulator and driver stages, 750 watts plate input.

See opposite page for list of components.

COMPONENTS FOR TYPICAL CIRCUITS

(Diagrams, Page 6)

L_{p1} - C_{p1} —Tank circuit appropriate for operating frequency; Q = 12. Capacitor plate spacing = .200".

L_{p2} - C_{p2} —Tank circuit appropriate for operating frequency; Q = 12. Capacitor plate spacing = .200".

L_{p3} - C_{p3} —Tank circuit appropriate for operating frequency; Q = 12. Capacitor plate spacing = .375".

L_{p4} - C_{p4} —Tank circuit appropriate for operating frequency; Q = 12. Capacitor plate spacing = .375".

L_{g1} - C_{g1} — Tuned circuit appropriate for operating frequency.

L_{g2} - C_{g2} — Tuned circuit appropriate for operating freqency.

C_1 — .002-ufd., 500-v. mica

C_2 — .002-ufd., 5000-v. mica

C_3 — .001-ufd., 2500-v. mica

C_4 — 16-ufd., 450-v. electrolytic

C_5 — 10-ufd., 25-v. electrolytic

R_1 — 7000 ohms, 5 watts

R_2 — 70,000 ohms, 100 watts

R_3 — 3500 ohms, 5 watts

R_4 — 35,000 ohms, 200 watts

R_5 — 560 ohms, 1 watt

R_6 — 25,000 ohms, 2 watts

R_7 — 1500 ohms, 5 watts

RFC_1 — 2.5-mhy., 125-ma. r-f choke

RFC_2 — 1-mhy., 500-ma. r-f choke

T_1 — 10-watt driver transformer; ratio pri. to ½ sec. approx. 2:1.

T_2 — 200-watt modulation transformer; ratio pri. to sec. approx. 1:1; pri. impedance = 16,200 ohms, sec. impedance = 16,500 ohms.

T_3 — 5-watt driver transformer; ratio pri. to ½ sec. approx. 1.1:1.

T_4 — 400-watt modulation transformer; ratio pri. to sec. approx. 2.7:1; pri. impedance = 22,200 ohms, sec. impedance = 8300 ohms.

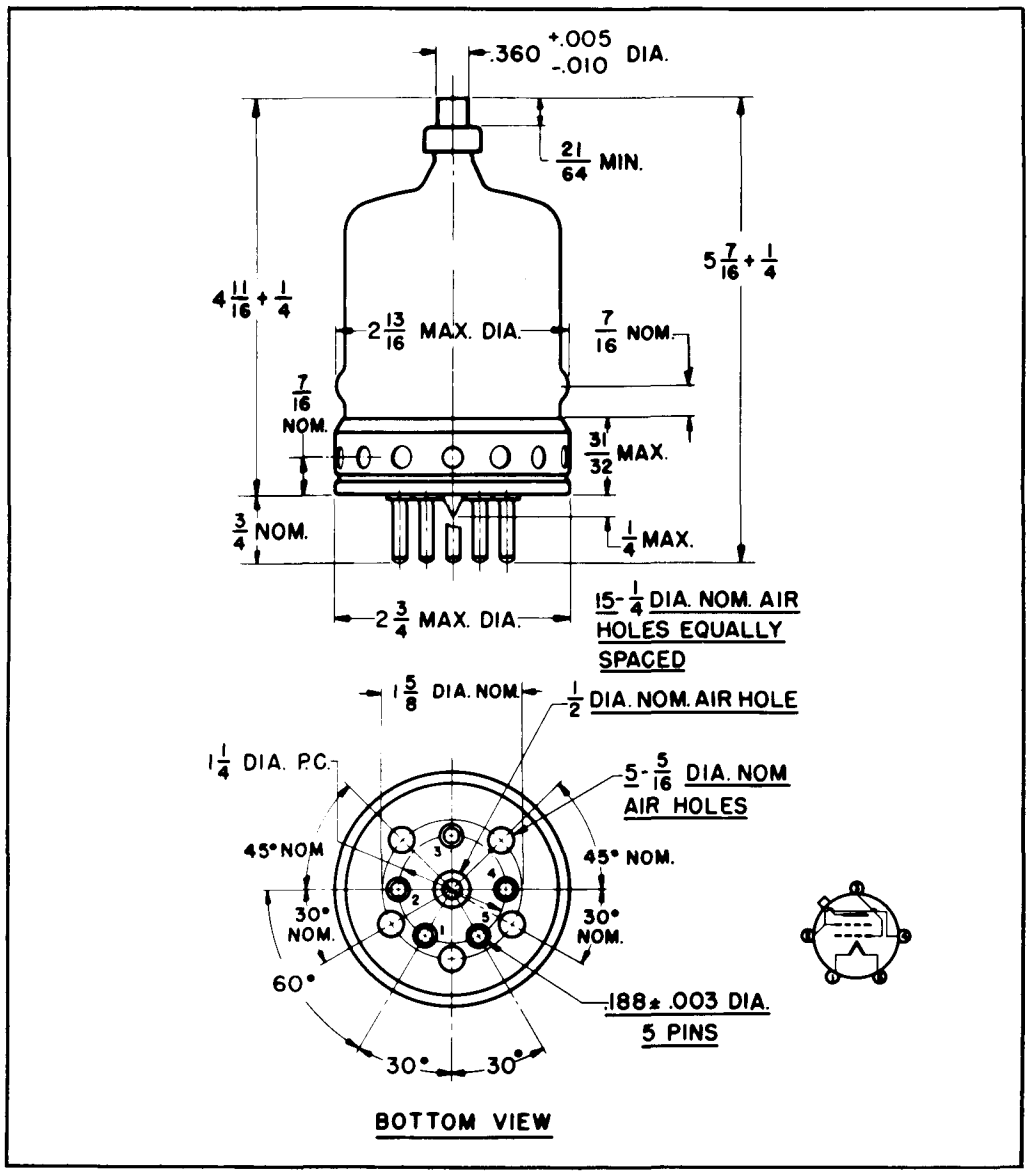

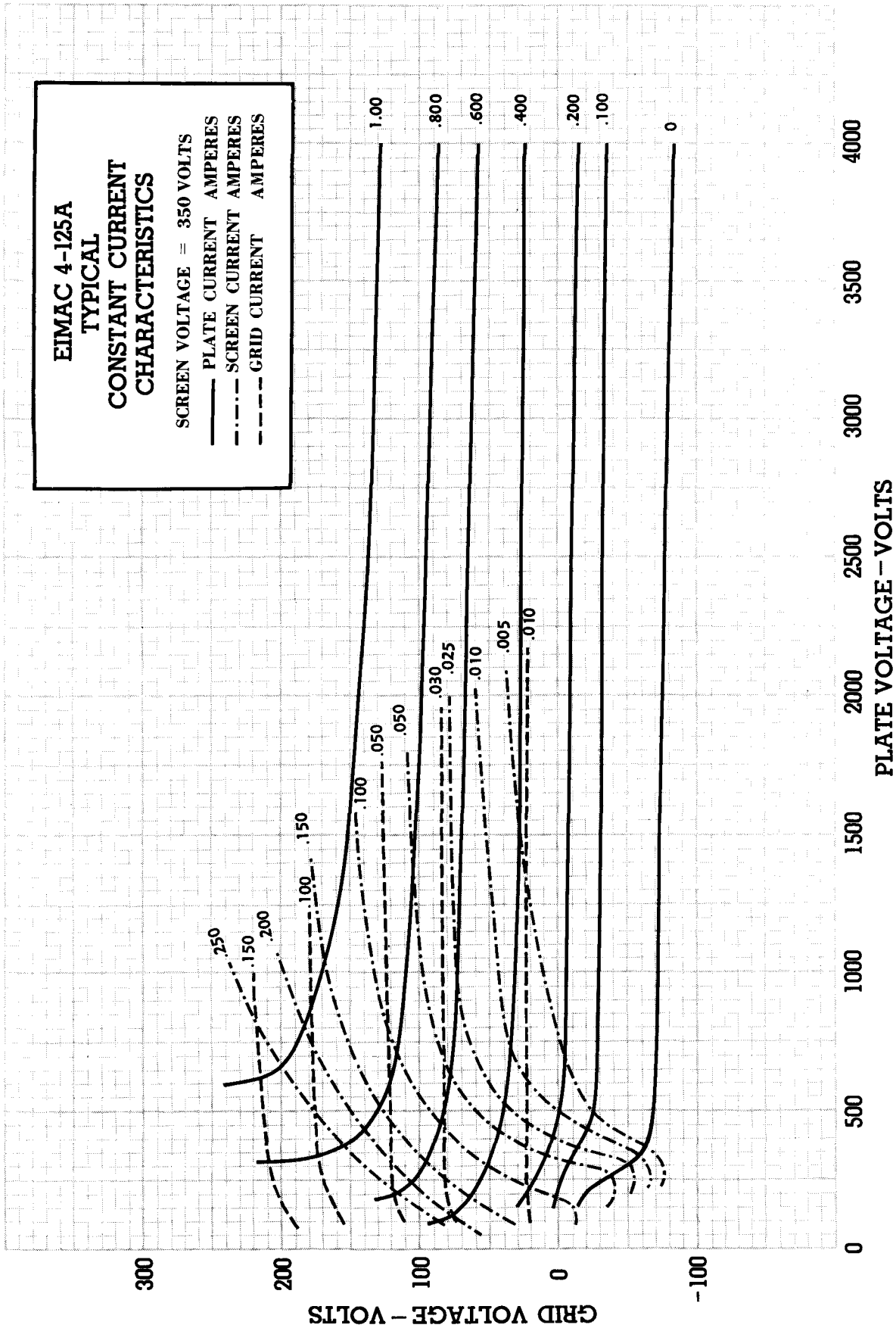
EIMAC 4-125A
TYPICAL
CONSTANT CURRENT
CHARACTERISTICS
SCREEN VOLTAGE = 350 VOLTS
PLATE CURRENT AMPERES
SCREEN CURRENT AMPERES
GRID CURRENT AMPERES
1.00
.800
.600
.400
.200
.100
0
.250
.150
.200
.100
.150
.100
.050
.050
.030
.025
.010
.005
.010
0
500
1000
1500
2000
2500
3000
3500
4000
PLATE VOLTAGE – VOLTS
300
200
100
0
-100
GRID VOLTAGE – VOLTS