—Standard Valves—

4074-A VALVE

DOUBLE TRIODE.

The characteristics given below are for one section only unless otherwise specified. Both sections of this valve are identical.

SPECIFICATION.

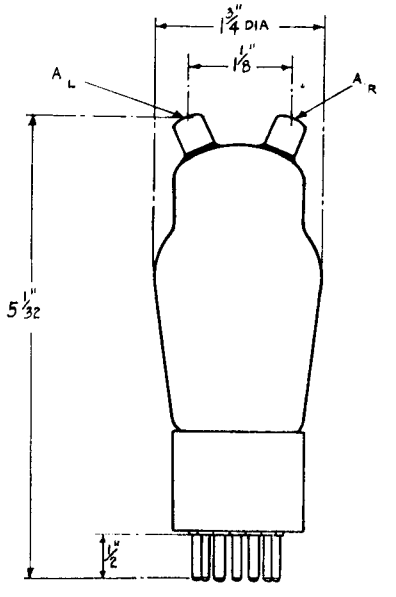

Cathode.

Indirectly heated oxide coated.
Constant voltage type.

Base.

American medium 7-pin.
Anode connected to top cap type B.

Dimensions.

Max. overall length	5 1/32" (12·8 cms.)
Max. diameter	1 13/16" (4·6 cms.)
Net weight	0·15 lbs. (68 gms.)

Constants.

Heater voltage	6·3 volts
Nominal heater current	0·8 amps.
*Amplification factor	14
*Impedance	4,700 ohms.
*Mutual conductance	3·0 mA.per volt
Grid–anode capacity	2·7 $\mu\mu$F.
Grid–cathode capacity	6·0 $\mu\mu$F.
Anode–cathode capacity	2·1 $\mu\mu$F.

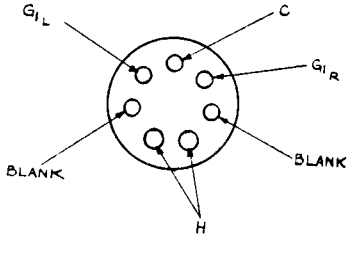

* *For one section measured at* Vp = 250 *volts,* V_{g1} = —7 *volts.*

LIMITING CONDITIONS FOR SAFE OPERATION.

Maximum anode voltage	300 volts
Maximum anode dissipation	5 watts
Maximum anode current	50 mA.

Tentative data.

—Standard Valves—

TYPICAL OPERATING CONDITIONS.

	Class A. A.F. Amp. (See Note 1)
Anode voltage	300 volts
Grid bias	—13 volts
Total anode current for 2 sections	30 mA.
Load resistance	5,000 ohms
Nominal power output for 2 sections	0·8 watt

	Class B. A.F. Amp. (See Note 3)	
Anode voltage	180	300 volts
Grid bias	—8	—16 volts
Anode current per section—zero signal	7	7 mA.
maximum signal	37	37 mA.
Load resistance—anode to anode	4,000	7,000 ohms
Peak AF grid to grid voltage	100	120 volts
Anode dissipation per section	3	5 watts
Power output—two sections	7	12 watts

	Class C Push Pull Amp. or Osc.
Anode voltage	300 volts
Grid bias (See Note 2)	—36 volts
Average anode current	80 mA.
Grid current	18 mA.
Grid resistor	2,000 ohms
Power output	14 watts

Note 1.—Two sections connected in parallel at the socket, anode to anode and grid to grid. The output power may be increased to 1·0 watt by connecting the two halves in push-pull.

Note 2.—The fixed bias should be at least 15 volts to protect the valve in case of failure to oscillate.

Note 3.—Two sections connected in push pull.

PRINTED IN
ENGLAND

—Standard Valves—

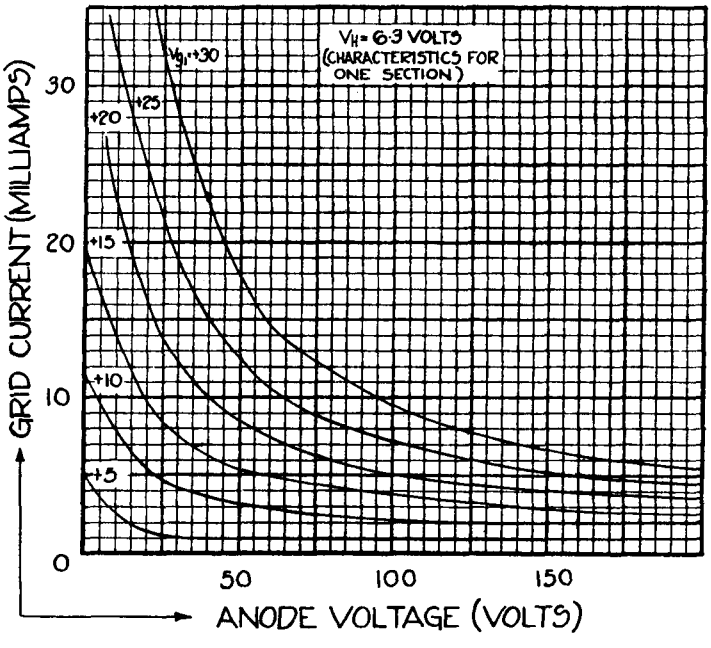

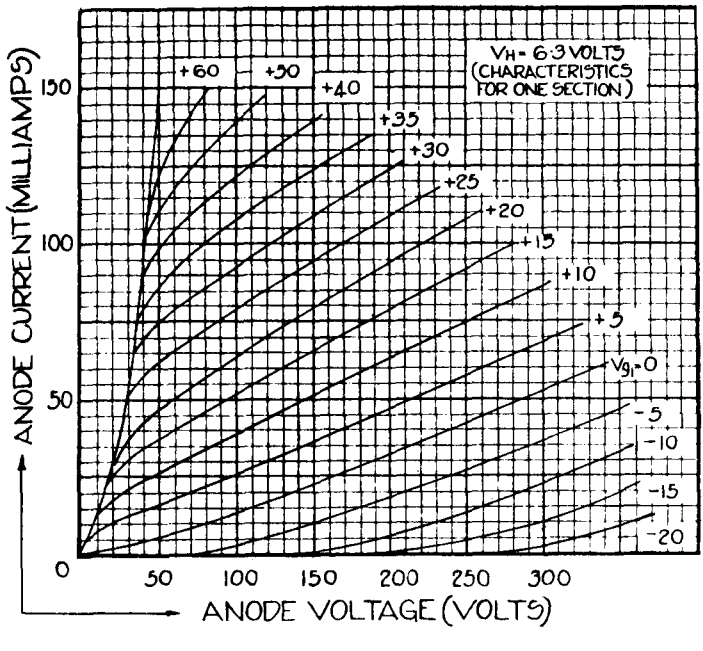

Tentative data

PRINTED IN
ENGLAND