EIMAC
Division of Varian
SAN CARLOS
CALIFORNIA

TENTATIVE DATA

8162
3X3000F7

HIGH-MU POWER TRIODE

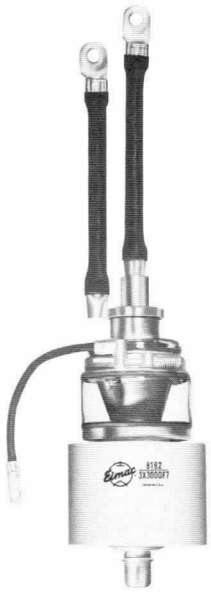

The Eimac 8162/3X3000F7 is an external-anode power triode intended to be used as a zero-bias Class-B amplifier in audio or radio-frequency applications. Operation with zero grid bias offers circuit simplicity by eliminating the bias supply. In addition, grounded-grid operation is attractive since a power gain of over twenty times can be obtained with the 8162/3X3000F7.

GENERAL CHARACTERISTICS

ELECTRICAL		
Filament: Thoriated-Tungsten		
Voltage	7.5	volts
Current	51	amperes
Amplification Factor	200	
Interelectrode Capacitances:		
Grid-Filament	38	uuf
Grid-Plate	24	uuf
Plate-Filament	0.6	uuf
Frequency for Maximum Ratings	30	Mc
MECHANICAL		
Base	See outline drawing	
Operating Position	Vertical, base up or down	
Cooling	Forced air	
Maximum Operating Temperatures:		
Anode Core and Seals	150°C	
Maximum Dimensions:		
Height (Does not include filament connectors)	8.6	inches
Diameter	4.16	inches
Net Weight	7.5	pounds

A-F AMPLIFIER OR MODULATOR CLASS-B, GRID-DRIVEN

MAXIMUM RATINGS (Per Tube)

D-C PLATE VOLTAGE	5000 VOLTS
D-C PLATE CURRENT	2.5 AMPS
PLATE DISSIPATION	3 KW
GRID DISSIPATION	225 WATTS

TYPICAL OPERATION, Two Tubes, Sinusoidal Wave

D-C Plate Voltage	4000	volts
D-C Grid Voltage	0	volts
Zero-Sig D-C Plate Current*	0.640	amps
Max-Sig D-C Plate Current	4.00	amps
Max-Sig D-C Grid Current	0.860	amps
Driving Power	120	watts
Peak A-F Driving Voltage (per tube)	185	volts
Load Resistance, Plate-to-Plate	2200	ohms
Max-Sig Plate Output Power	11,000	watts

(Effective 5-5-61) Copyright 1961 by Eitel-McCullough, Inc.

R-F LINEAR AMPLIFIER
CLASS-B, GROUNDED-GRID

MAXIMUM RATINGS	
D-C PLATE VOLTAGE	5000 VOLTS
D-C PLATE CURRENT	2.5 AMPS
PLATE DISSIPATION	3 KW
GRID DISSIPATION	225 WATTS

TYPICAL OPERATION, Single-Tone Conditions

D-C Plate Voltage	4000	5000	volts
Zero-Sig D-C Plate Current*	0.32	0.44	amps
Max-Sig D-C Plate Current	2.00	1.56	amps
Max-Sig D-C Grid Current	0.42	0.33	amps
Driving Impedance	50	50	ohms
Resonant Load Impedance	1120	1850	ohms
Max-Sig Driving Power	360	215	watts
Peak Envelope Plate Output Power	5500	5500	watts
Power Gain	15.3	25.6	times

R-F LINEAR AMPLIFIER
CARRIER CONDITIONS, GRID-DRIVEN

MAXIMUM RATINGS	
D-C PLATE VOLTAGE	5000 VOLTS
D-C PLATE CURRENT	2.5 AMPS
PLATE DISSIPATION	3 KW
GRID DISSIPATION	225 WATTS

TYPICAL OPERATION

D-C Plate Voltage	4000	volts
D-C Grid Voltage	0	volts
Zero-Sig D-C Plate Current*	0.32	amps
D-C Plate Current	0.815	amps
D-C Grid Current	0.205	amps
Driving Impedance †	220	ohms
Peak Driving Voltage †	160	volts
Driving Power	15	watts
Plate Output Power	1100	watts

NOTE: "TYPICAL OPERATION" data are obtained by calculation from published characteristic curves and confirmed by direct tests. No allowance for circuit losses, either input or output, has been made.

APPLICATION

INPUT CIRCUIT - When the 3X3000F7 is operated as a grounded-grid r-f amplifier, the use of a resonant tank in the cathode circuit is recommended in order to obtain greatest linearity and power output. For best results with a single-ended amplifier it is suggested that the cathode tank circuit operate at a "Q" of five or more.

COOLING - The maximum temperature rating for the anode core and seals of the 3X3000F7 is 150°C. Sufficient forced-air cooling must be provided to keep the temperature of the anode core and the temperatures of the glass-to-metal seals below 150°C. Tube life is usually prolonged if these areas are maintained at temperatures below the maximum rating. Minimum air flow requirements to maintain anode-core and seal temperatures below 150°C with inlet-air temperatures of 40°C and 55°C are tabulated. A maximum ambient temperature of 40°C will apply to most commercial installations, while the 55°C data is useful when designing equipment in conformance with MIL-E-5400 Curve A (Class I).

In addition, a minimum air flow of 7 CFM must be directed into the filament stem structure, between the inner and outer filament conductors. This rate of air flow provides sufficient stem cooling at ambient temperatures up to 55°C.

*Approximate Values

†Modulation Crest Conditions

SEA LEVEL PRESSURE, ANODE-TO-BASE AIR FLOW				
	40°C Max Ambient Air Temp.		55°C Max Ambient Air Temp.	
Plate** Dissipation (Watts)	Air Flow (CFM)	Pressure Drop (Inches of Water)	Air Flow (CFM)	Pressure Drop (Inches of Water)
1000	45	0.43	65	0.65
2000	120	1.6	170	2.5
3000	235	4.0	330	6.0

**Since the power dissipated by the filament is about 375 watts and since grid dissipation can, under some circumstances, represent another 225 watts, allowance has been made in preparing this tabulation for an additional 600 watts dissipation.

DIMENSION DATA			
REF.	NOM	MIN	MAX
A		4.093	4.156
B		.781	.843
C			3.625
D		6.375	6.625
E		.859	.890
F		.812	.937
G		.687	.812
H		7	7.500
J		.812	.937
K		.375	.437
L		1	1.125
M		7	7.500
N		1.437	1.562
P		7.937	8.437
Q		4	4.125
R		2.968	3.031
S		1.187	1.437
T		8.156	8.593
U		8.937	9.437

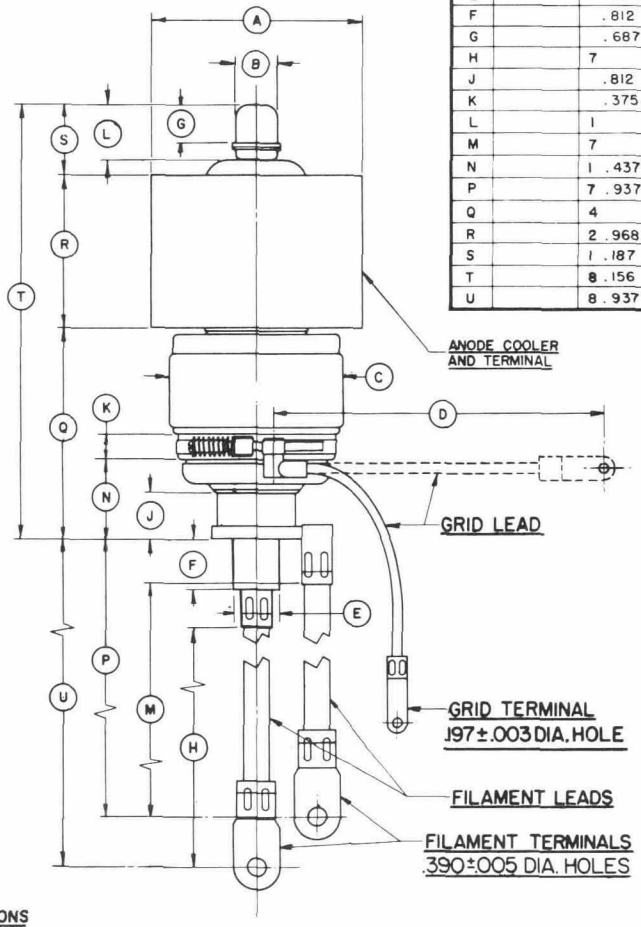

ALL DIMENSIONS IN INCHES

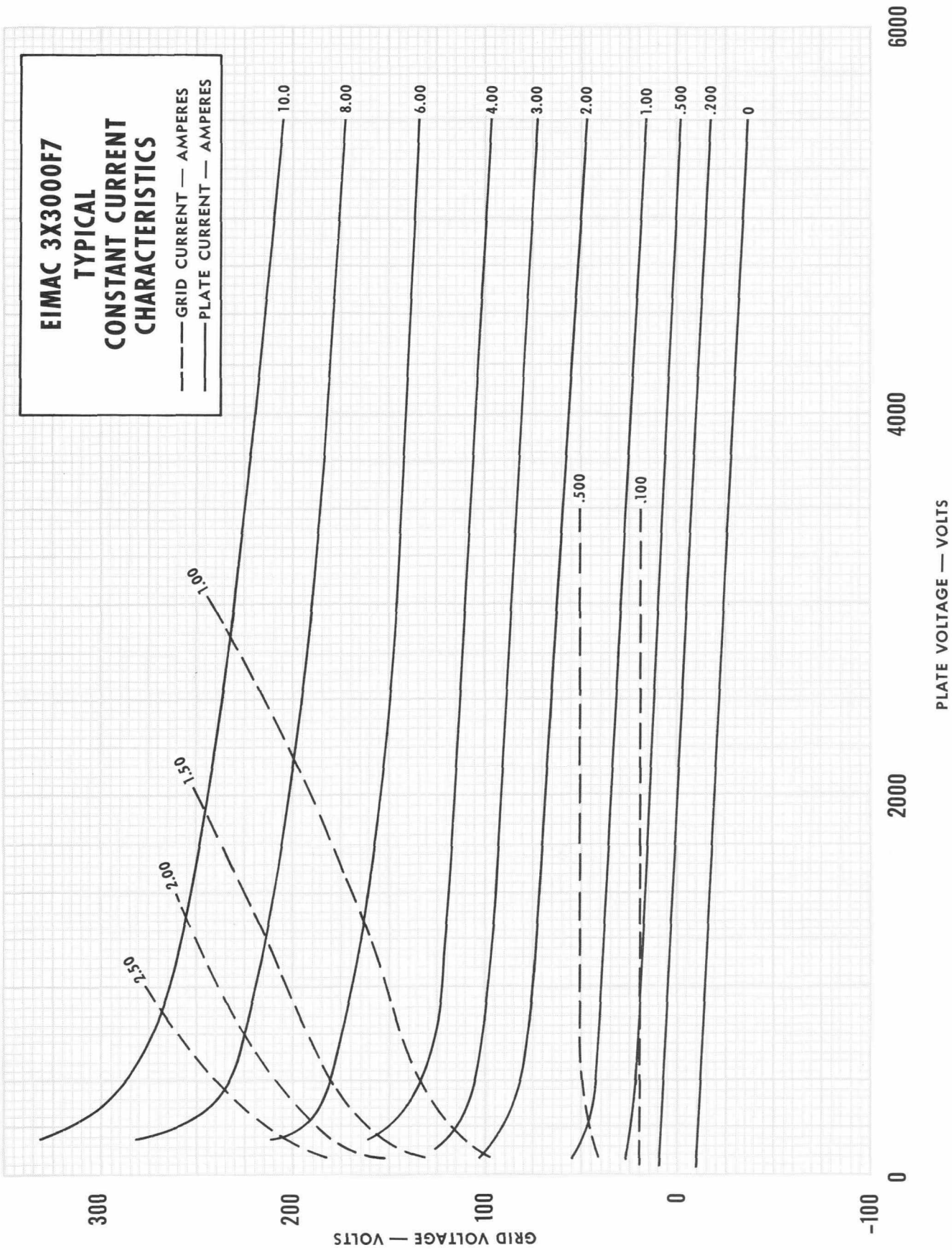

Printed in U.S.A. 993