CHARACTERISTICS

GENERAL DATA

Focusing Method			Electrostatic
Deflection Method			Electrostatic
Types*	**3WP1**	**3WP2**	**3WP11**
Fluorescence	Green	Blue-Green	Blue
Phosphorescence	.....	Green	.....
Persistence	Medium	Long	Short
Faceplate			Flat, Clear

**In addition to the types shown, the 3WP- can be supplied with several other screen phosphors.*

ELECTRICAL DATA

Heater Voltage	6.3 Volts
Heater Current	0.6 ± 10% Ampere

Direct Interelectrode Capacitances

	Min.	Max.
Cathode to All Other Electrodes	3.0	5.7 μμf
Grid No. 1 to All Other Electrodes	4.6	8.7 μμf
Between Deflecting Plates 1-2	1.7	3.3 μμf
Between Deflecting Plates 3-4	1.0	2.0 μμf
Deflecting Plate 1 to All Other Electrodes except D2	3.8	7.2 μμf
Deflecting Plate 2 to All Other Electrodes except D1	3.8	7.2 μμf
Deflecting Plate 3 to All Other Electrodes except D4	2.5	4.8 μμf
Deflecting Plate 4 to All Other Electrodes except D3	2.5	4.8 μμf

MECHANICAL DATA

Minimum Useful Screen Diameter	2¾ Inches
Base (Small Shell Duodecal 12-Pin or	B12-43
Small Shell Duodecal 10-Pin)	B10-75
Basing	12T
Base Alignment	
D1-D2 trace aligns with Pin No. 3 and Tube Axis	±10 Degrees
Angle Between D1-D2 and D3-D4 Traces	90 ± 1 Degree

Positive voltage on D1 deflects beam approximately toward Pin No. 3.

Positive voltage on D3 deflects beam approximately toward Pin No. 12.

QUICK REFERENCE DATA

3″ Direct Viewed
Round Glass Type
Electrostatic Deflection
Electrostatic Focus
High Deflection Sensitivity
Flat, Clear Faceplate

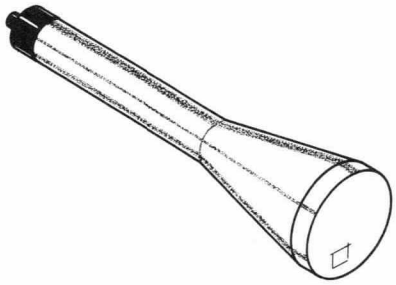

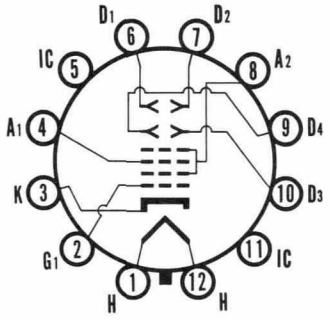

12-T

SYLVANIA
ELECTRONIC TUBES
A Division of
Sylvania Electric Products Inc.
PICTURE TUBE OPERATIONS
SENECA FALLS, NEW YORK

Prepared and Released By The
TECHNICAL PUBLICATIONS SECTION
EMPORIUM, PENNSYLVANIA

NOVEMBER, 1959

File Under
SPECIAL AND GENERAL
PURPOSE CATHODE RAY TUBES

RATINGS

MAXIMUM RATINGS (Absolute Maximum Values)

Anode No. 2 Voltage[1]	2750	Volts	dc
Anode No. 1 Voltage (Focusing Electrode)	1100	Volts	dc
Grid No. 1 Voltage			
Negative Bias Value	220	Volts	dc
Positive Bias Value	0	Volts	dc
Positive Peak Value	0	Volts	
Peak Heater Cathode Voltage			
Heater Negative with Respect to Cathode	200	Volts	
Heater Positive with Respect to Cathode	200	Volts	
Peak Voltage Between Anode No. 2 and Any Deflecting Plate	550	Volts	

TYPICAL OPERATING CONDITIONS

Anode No. 2 Voltage	1500	Volts	dc
Anode No. 1 Voltage for Focus	247 to 465	Volts	dc
Grid No. 1 Voltage Required for Cutoff[2]	–45 to –75	Volts	dc
Deflection Factor			
Deflecting Plates 1-2	62 to 76	Volts	dc/Inch
Deflecting Plates 3-4	43 to 52	Volts	dc/Inch
Modulation[3] (3WP1, at 7 Ft. L. Light Output)	50	Volts	Max.
Line Width A[3] (3WP1, at 7 Ft. L. Light Output)	.026	Inches	Max.
Deflection Factor Uniformity[4]	2	Percent	Max.
Pattern Distortion @ 75% of Useful Scan[5]	2½	Percent	Max.
Spot Position (Focused, Undeflected)[6]	Within a 3/16 Inch Radius Circle		

Useful Scan

D1-D2 ± 1.25 Inches from Tube Face Center
or a total of 2.50 Inches Min.

D3-D4 ± 1.125 Inches from Tube Face Center
or a total of 2.25 Inches Min.

CIRCUIT VALUES

Grid No. 1 Circuit Resistance	1.5	Megohms	Max.
Deflection Circuit Resistance[7]	5.0	Megohms	Max.

NOTES:

1. *The product of acceleration voltage and average acceleration current should be limited to 6.0 watts.*
2. *Visual extinction of undeflected focused spot.*
3. *Measured in accordance with MIL-E-1.*
4. *The deflection factors of 75% of useful scan and at 25% of useful scan shall not differ by more than the indicated value.*
5. *The edges of a raster pattern, whose mean dimensions are the indicated percentage of useful scan, shall not deviate from the mean dimensional rectangle by more than the specified amount.*
6. *Centered on the tube face with the tube shielded and with all deflection plates connected to anode No. 2.*
7. *It is recommended that the deflecting electrode circuit resistances be approximately equal.*

OUTLINE

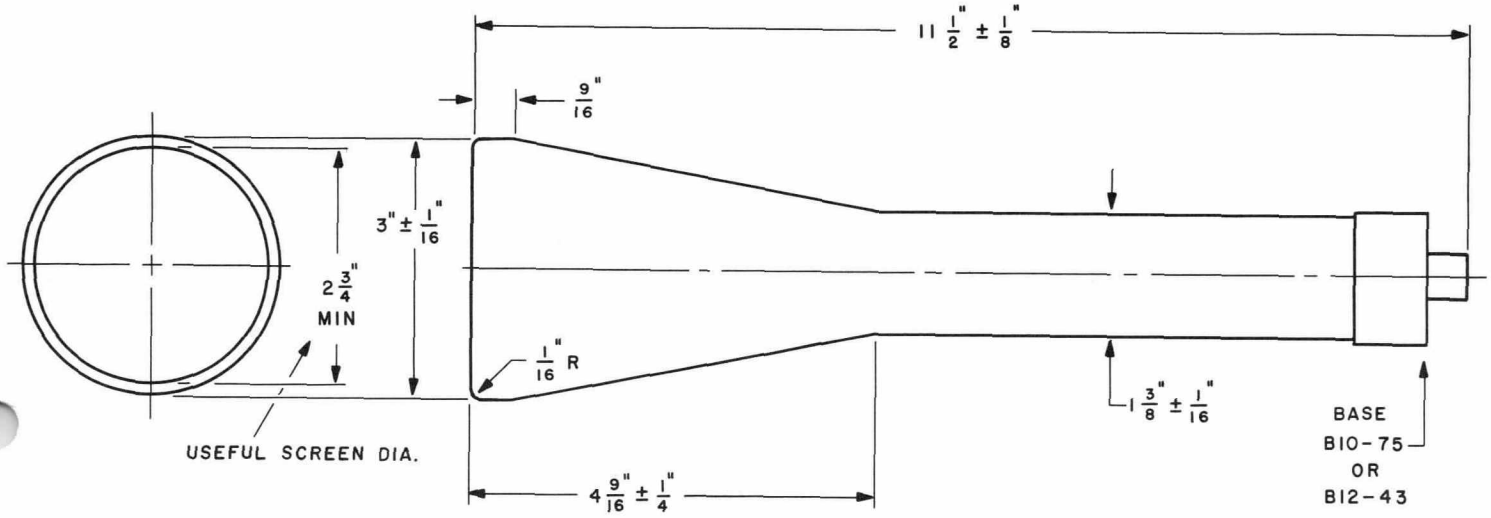

S 58068