SYLVANIA engineering data service

SYLVANIA 3SP1 3SP*

CHARACTERISTICS

GENERAL DATA

Focusing Method . . . . . Electrostatic
Deflecting Method . . . . . Electrostatic

Types*	Fluorescence	Phosphorescence	Persistence
3SP1	Green	———	Medium
3SP2	Blue-Green	Green	Long
3SP4	White	———	Short to Medium
3SP5	Blue	———	Very Short
3SP7	Blue-White	Yellow	Long
3SP11	Blue	———	Short

Faceplate . . . . . Clear, Cylindrical

*In addition to the types shown, the 3SP- can be supplied with several other screen phosphors.

ELECTRICAL DATA

Heater Voltage . . . . . 6.3 Volts
Heater Current . . . . . 0.6 ± 10% Ampere
Direct Interelectrode Capacitances (approx.)
- Cathode to All Other Electrodes . . . . . 5 pf
- Grid No. 1 to All Other Electrodes . . . . . 6.5 pf
- Between Deflecting Plates 1-2 . . . . . 2 pf
- Between Deflecting Plates 3-4 . . . . . 2 pf
- Deflecting Plate 1 to All Other Electrodes . . . 7.5 pf
- Deflecting Plate 2 to All Other Electrodes . . . 6.0 pf
- Deflecting Plate 3 to All Other Electrodes . . . 5.5 pf
- Deflecting Plate 4 to All Other Electrodes . . . 6.5 pf

MECHANICAL DATA

Minimum Useful Screen Dimensions
- Horizontal . . . . . 2¾ Inches
- Vertical . . . . . 1⅛ Inches
- Diagonal . . . . . 3 Inches

Base (Small Shell Duodecal 12-Pin) B12-43
Basing 12E
Base Alignment
- The Plane through the Base Key and the Tube Axis aligns with Long Axis of Tube Face . . ± 10 Degrees

Trace Alignment[1]
- Angle Between D1-D2 trace and D3-D4 trace . . 90 ± 1 Degrees
- D1-D2 trace Aligns with Long Axis of Tube Face[2] . . . . . ± 1.5 Degrees

Positive Voltage on D1 deflects Beam approx. Toward Key
Positive Voltage on D3 deflects Beam approx. Toward Pin. No. 4
Bulb . . . . . C26 Exp 6 or equivalent
Weight (approx.) . . . . . ¾ Pound

RATINGS

MAXIMUM RATINGS (Absolute Maximum Values)

Anode No. 2 Voltage . . . . . 3000 Volts dc
Anode No. 1 Voltage (Focusing Electrode) . . . . 1200 Volts dc
Anode No. 2 Input . . . . . 6 Watts Max.

QUICK REFERENCE DATA

Oscilloscope Tube
1½" x 3" Direct Viewed
Rectangular Glass Type
Electrostatic Deflection
Electrostatic Focus
Clear, Cylindrical Faceplate

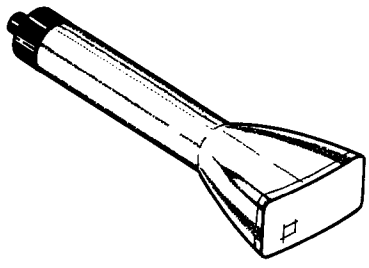

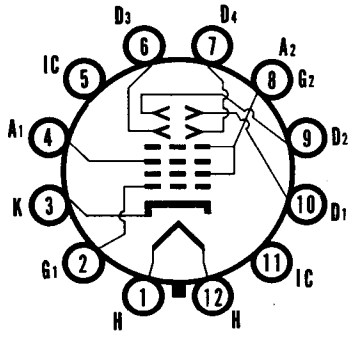

12-E

SYLVANIA ELECTRIC PRODUCTS INC.

Electronic Components Group
ELECTRONIC TUBE DIVISION
SENECA FALLS, NEW YORK

A Technical Publication

APRIL, 1964

File Under

SPECIAL AND GENERAL PURPOSE CATHODE RAY TUBES

MAXIMUM RATINGS (Absolute Maximum Values) (con'td)

Grid No. 1 Voltage	
Negative Bias Value	200 Volts dc
Positive Bias Value	0 Volts dc
Positive Peak Value	2 Volts
Peak Heater-Cathode Voltage	
Heater Negative with Respect to Cathode	140 Volts
Heater Positive with Respect to Cathode	140 Volts
Peak Voltage between A2 and any Deflecting Plate	550 Volts

TYPICAL OPERATING CONDITIONS

Anode No. 2 Voltage	2000 Volts dc
Anode No. 1 Voltage for Focus	330 to 620 Volts dc
Grid No. 1 Voltage Required for Cutoff[3]	−58 to −135 Volts dc
Deflection Factors	
Deflecting Plates 1-2	146 to 198 Volts dc/Inch
Deflecting Plates 3-4	104 to 140 Volts dc/Inch
Spot Position (Focused, Undeflected)[4]	Within a 12 mm Square

CIRCUIT VALUES

Grid No. 1 Circuit Resistance	1.5 Megohms Max.
Resistance in Any Deflecting Plate Circuit[5]	1.0 Megohms Max.

NOTES:

1. *Deflecting plates 1 & 2 are nearer the screen, and scan the major dimension of the screen. Plates 3 & 4 are nearer the base, and scan the minor dimension of the screen.*
2. *The D1-D2 trace scanning through the geometric center of the tube face will be parallel to the long axis of the tube face, within the limits specified.*
3. *Visual extinction of undeflected focused spot.*
4. *With deflecting plates connected to Anode No. 2 and with tube shielded. The sides of the limit square will be parellel to the deflection axes.*
5. *It is recommended that the deflecting plate circuit resistances be approximately equal.*

OUTLINE

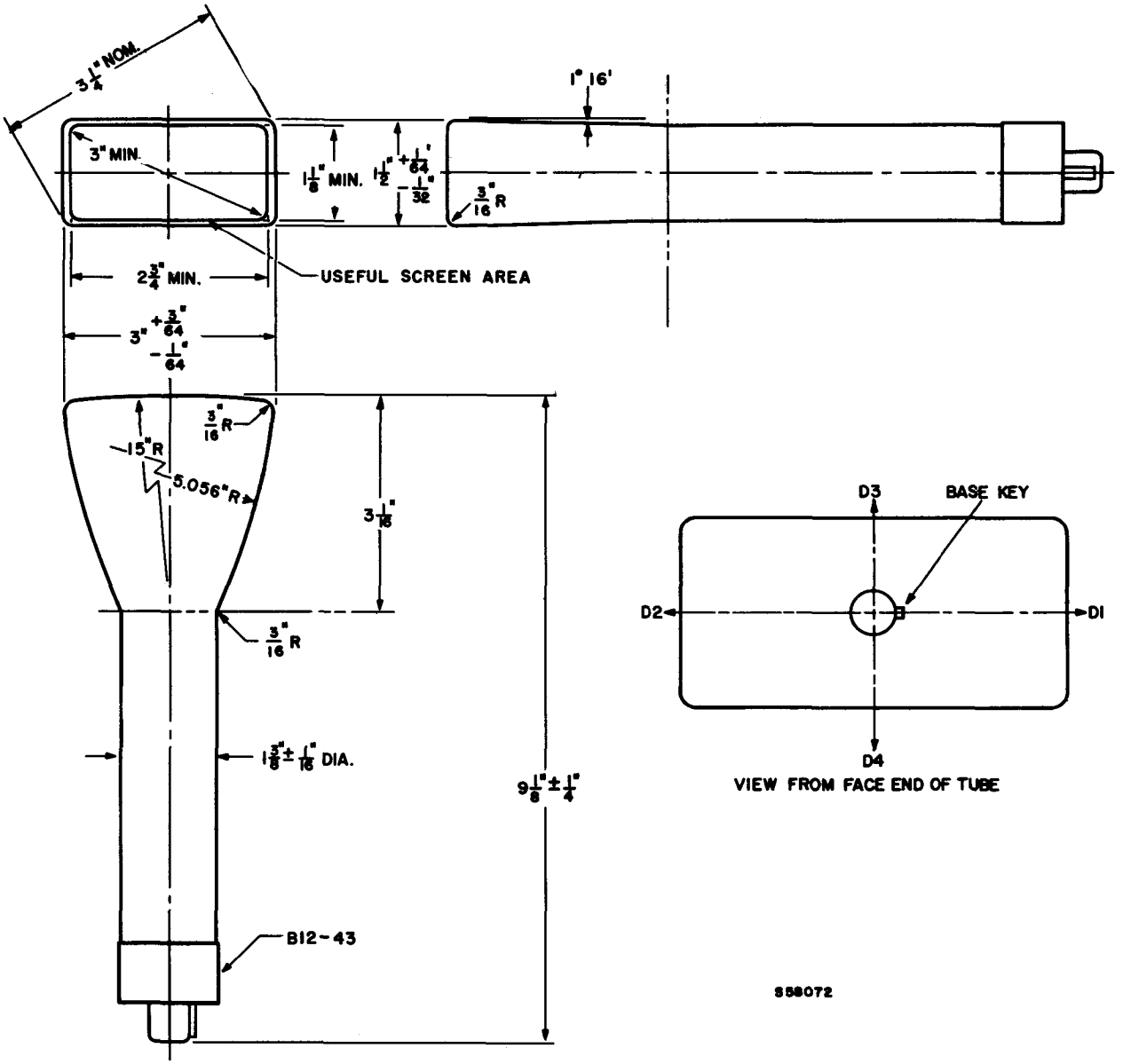
3 1/4" NOM.
3" MIN.
1 1/8" MIN.
1 1/2" +1/64" -1/32"
1° 16'
3/16" R
USEFUL SCREEN AREA
2 3/4" MIN.
3" +3/64" -1/64"
3/16" R
15" R
5.056" R
3 1/16"
3/16" R
1 3/8" ± 1/16" DIA.
9 1/8" ± 1/4"
B12-43
D3
BASE KEY
D2
D1
D4
VIEW FROM FACE END OF TUBE
S58072