SYLVANIA

engineering data service

SYLVANIA
3RP1
3RP*
3RP1A
3RP-A*

CHARACTERISTICS

GENERAL DATA

Focusing Method		Electrostatic
Deflection Method		Electrostatic
Phosphor	3RP1, 3RP1A	3RP4, 3RP4A
Fluorescence	Green	White
Persistence	Medium	Short to Medium
Faceplate		Clear

*In addition to the types shown, the 3RP- and 3RP-A can be supplied with several other screen phosphors.

ELECTRICAL DATA

Heater Voltage	6.3 Volts
Heater Current	0.6 ± 10 % Ampere
Direct Interelectrode Capacitances (Approx.)	
Cathode to All Other Electrodes	6 μμf
Grid No. 1 to All Other Electrodes	8 μμf
Between Deflecting Plates 1-2	2 μμf
Between Deflecting Plates 3-4	2 μμf
Deflecting Plate 1 to All Other Electrodes	11 μμf
Deflecting Plate 2 to All Other Electrodes	8 μμf
Deflecting Plate 3 to All Other Electrodes	7 μμf
Deflecting Plate 4 to All Other Electrodes	8 μμf

MECHANICAL DATA

Minimum Useful Screen Diameter	2¾ Inches
Overall Length	9⅛ ± ¼ Inches
Base (Small-Shell Duodecal 10-Pin)	B10-75
or (Small-Shell Duodecal 12-Pin)	B12-43
Basing	12E
Base Alignment	
D3-D4 Trace Aligns with Pin No. 1 and Tube Axis	±10 Degrees
Positive Voltage on D1 Deflects Beam Approx. Toward Pin No. 4	
Positive Voltage on D3 Deflects Beam Approx. Toward Pin No. 1	
Angle Between D3-D4 and D1-D2 Traces	90 ± 3 Degrees
Bulb	3RP-: J24P; 3RP-A: J24S
Weight (Approx.)	½ Pound

RATINGS

MAXIMUM RATINGS (Absolute Maximum Values)

Anode No. 2 Input	6 Watts	
Anode No. 2 Voltage	2750 Volts	dc
Anode No. 1 Voltage	1100 Volts	dc
Grid Voltage		
Negative Bias Value	220 Volts	dc
Positive Bias Value	0 Volts	dc
Positive Peak Value	2 Volts	
Peak Heater-Cathode Voltage		
Heater Negative with Respect to Cathode	140 Volts	
Heater Positive with Respect to Cathode	140 Volts	
Peak Voltage Between Anode No. 2 and Any Deflection Plate	550 Volts	

QUICK REFERENCE DATA

Oscilloscope Tube
3″ Direct Viewed
Round Glass Type
Electrostatic Deflection
Electrostatic Focus
Flat Faceplate (3RP1A)
Spherical Faceplate (3RP1)

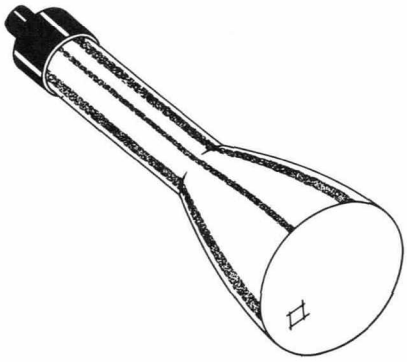

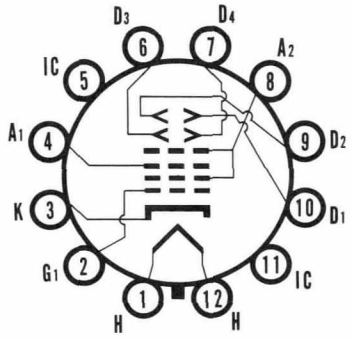

12-E

SYLVANIA
ELECTRONIC TUBES

A Division of
Sylvania Electric Products Inc.

PICTURE TUBE
OPERATIONS

SENECA FALLS, NEW YORK

Prepared and Released By The
TECHNICAL PUBLICATIONS SECTION
EMPORIUM, PENNSYLVANIA

JUNE, 1962

File Under
SPECIAL AND GENERAL
PURPOSE CATHODE RAY TUBES

TYPICAL OPERATING CONDITIONS

Anode No. 2 Voltage	1000	2000 Volts	dc
Anode No. 1 Voltage for Focus	165 to 310	330 to 620 Volts	dc
Grid Voltage Required for Cutoff[1]	−22.5 to −67.5	−45 to −135 Volts	dc
Deflection Factor			
Deflecting Plates 1-2[2]	73 to 99	146 to 198 Volts	dc/Inch
Deflecting Plates 3-4[3]	52 to 70	104 to 140 Volts	dc/Inch
Spot Position (Undeflected)[4]	—	7.5 MM	Max.

CIRCUIT VALUES

Grid Circuit Resistance	1.5 Megohms Max.
Deflection Circuit Resistance[5]	5.0 Megohms Max.

NOTES:

1. *Visual extinction of undeflected focused spot.*
2. *Deflecting Plates 1-2 are nearer the screen.*
3. *Deflecting Plates 3-4 are nearer the base.*
4. *The undeflected focused spot will fall within a circle having 7.5 mm radius and concentric with the center of the tube face.*
5. *It is recommended that the deflecting electrode circuit resistances be approximately equal.*

3RP1A

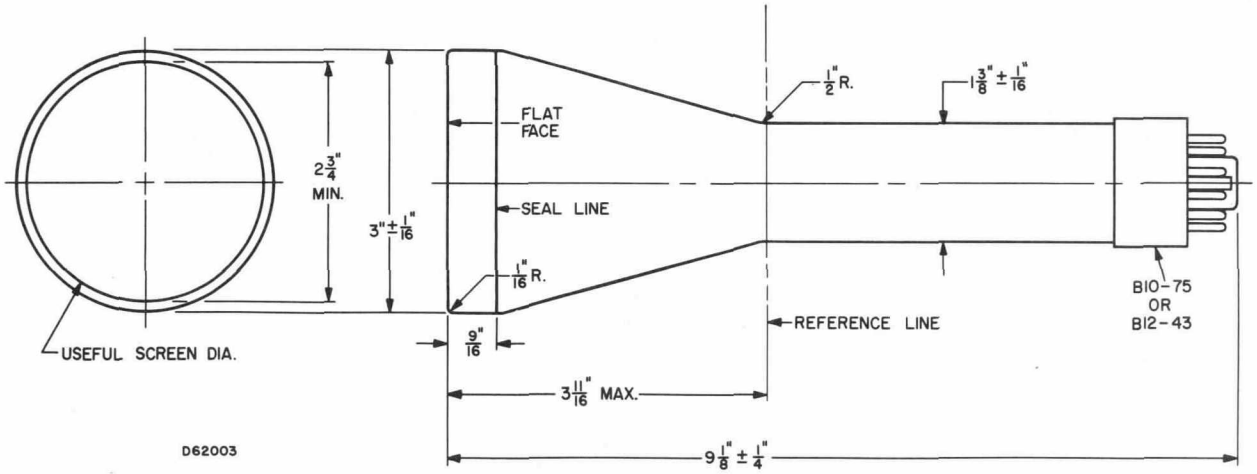
FLAT FACE
SEAL LINE
$\frac{1}{2}$" R.
$1\frac{3}{8}$" ± $\frac{1}{16}$"
$2\frac{3}{4}$" MIN.
3" ± $\frac{1}{16}$"
$\frac{1}{16}$" R.
B10-75 OR B12-43
REFERENCE LINE
USEFUL SCREEN DIA.
$\frac{9}{16}$"
$3\frac{11}{16}$" MAX.
$9\frac{1}{8}$" ± $\frac{1}{4}$"
D62003

3RP1

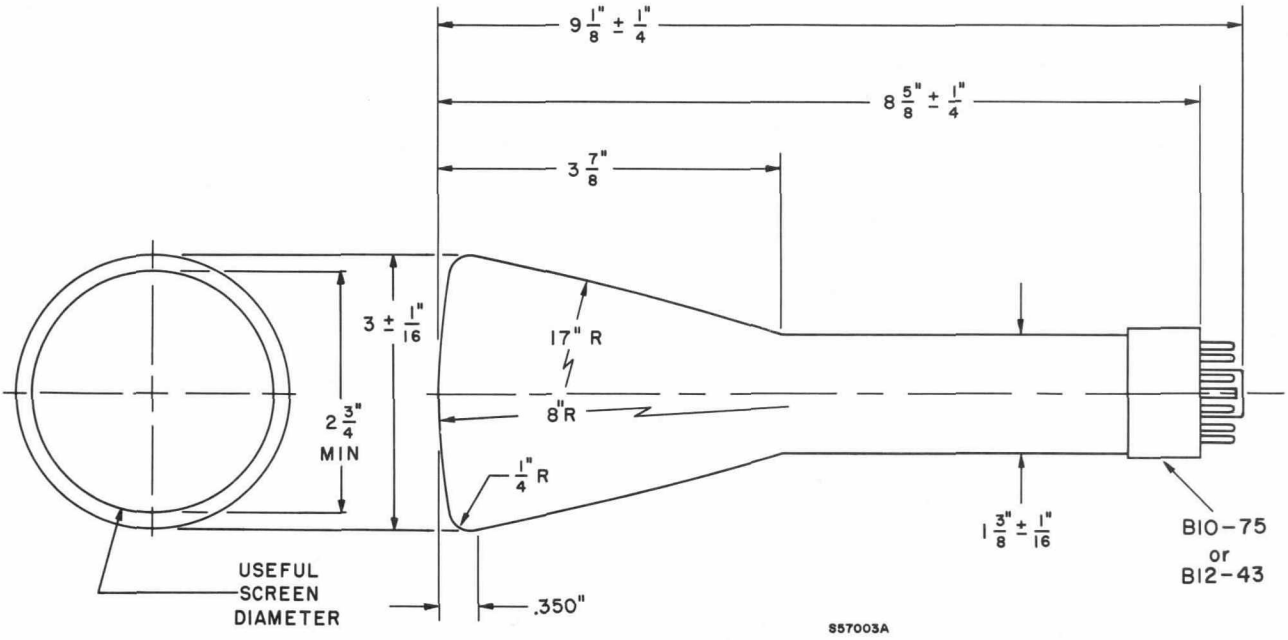
$9\frac{1}{8}$" ± $\frac{1}{4}$"
$8\frac{5}{8}$" ± $\frac{1}{4}$"
$3\frac{7}{8}$"
3 ± $\frac{1}{16}$"
17" R
8" R
$2\frac{3}{4}$" MIN
$\frac{1}{4}$" R
$1\frac{3}{8}$" ± $\frac{1}{16}$"
B10-75 or B12-43
USEFUL SCREEN DIAMETER
.350"
S57003A