Single Ended Water Cooled R.F. Triode

3Q/260E

CATHODE.

Thoriated tungsten filament		
Voltage	10	V
Nominal current	80	A
Peak usable emission	35	A

RATING.

Amplification factor	Measured at V_a2kV. I_a 2A	35	
Impedance		1,400	Ω

DIRECT INTER-ELECTRODE CAPACITIES.

Grid to anode	30	pF
Grid to filament	50	pF
Anode to filament	2.0	pF

COOLING.

Normal water flow	11	g.p.m.
Water Jacket	type 3005C	
Air cooling required when R.F. grid current exceeds 10 A per lead to be directed at grid seals through a fish-tail nozzle of 3″ by ¼″ orifice not less than	10	cu ft/min

DIMENSIONS.

Maximum overall length	355	mm
Maximum diameter	130	mm
Net weight	2,060	g

MAXIMUM RATINGS.

Maximum direct anode voltage	11	kV
Maximum anode dissipation	20	kW
Maximum grid dissipation	800	W
Maximum R.F. grid current per lead	30	A
Maximum frequency for above ratings	30	Mc/s

Tentative data
September 1948

Single Ended Water Cooled R.F. Triode

3Q/260E

TYPICAL OPERATING CONDITIONS

RADIO FREQUENCY

Class B Telephony. Modulated Carrier applied to grid.
(Carrier conditions per valve for use with 100% modulation).

Direct anode voltage	10	kV
Grid bias	—300	V
Direct anode current	3	A
Peak R.F. grid voltage	540	V
Power output	10	kW

Class C Power Amplifier Anode subject to Modulation.
(Carrier conditions per valve for use with 100% modulation).

Direct anode voltage	8	kV
Grid bias	—950	V
Direct anode current	4	A
Peak R.F. grid voltage	1,600	V
*Direct grid current	0.75	A approx.
Power output	20	kW

Class C Power Amplifier or Oscillator, Unmodulated.

Direct anode voltage	11	kV
Grid bias	—700	V
Direct anode current	5	A
Peak R.F. grid voltage	1,400	V
*Direct grid current	0.8	A approx.
Power output	38	kW approx.

*Subject to wide variation, depending upon the impedance of the load circuit.

Tentative data
September 1948

Single Ended Water Cooled R.F. Triode

3Q/260E

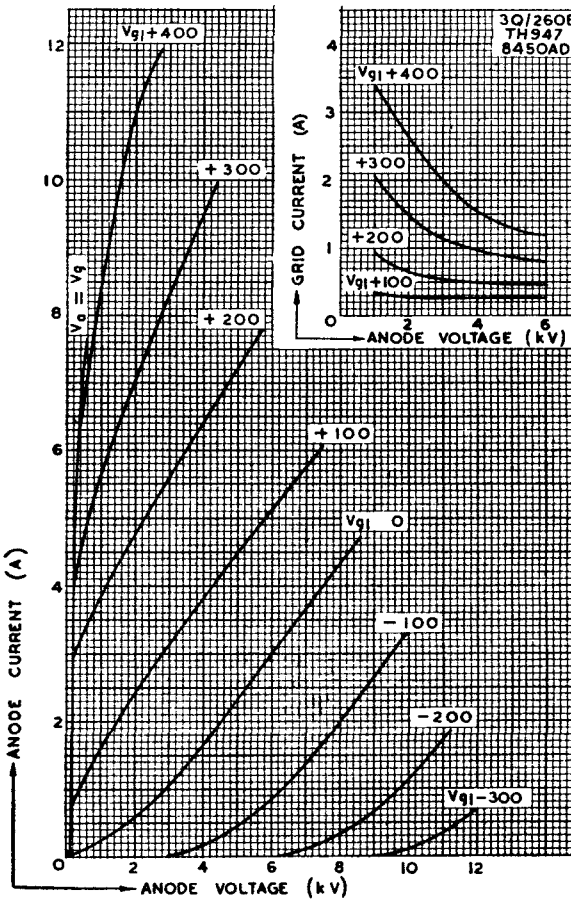

Tentative data
September 1948

Single Ended Water Cooled R.F. Triode

3Q/260E

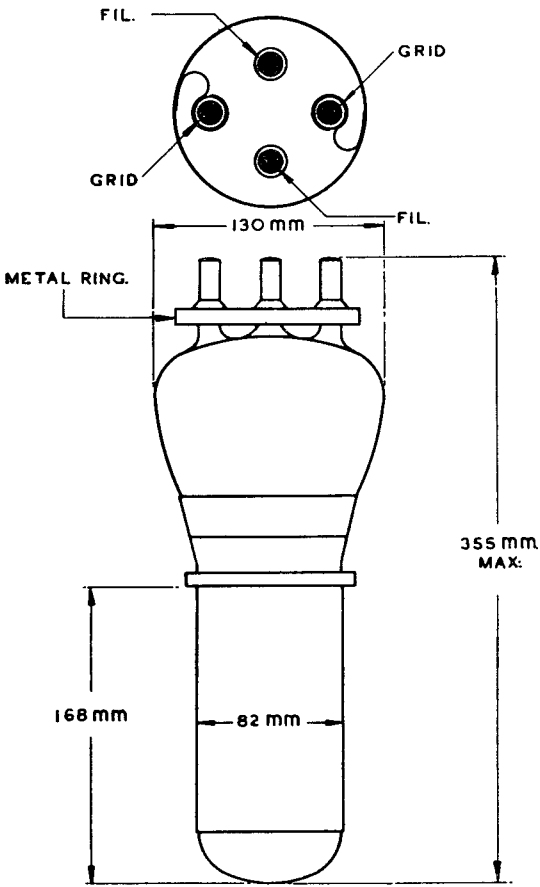

Tentative data
September 1948