Single-ended Water-cooled R.F. Power Amplifier Triode

3Q/221E

CATHODE.

Tungsten filament		
Nominal voltage (Actual voltage marked on bulb)	22	V
Nominal current	70	A
Peak emission	12	A

RATING.

Amplification factor { Measured at Va 12kV Ia 1.5A }	26	
Impedance { Measured at Va 12kV Ia 1.5A }	2,900	Ω

DIRECT INTER-ELECTRODE CAPACITIES.

Grid to anode	17	pF
Grid to filament	29	pF
Anode to filament	1	pF

WATER FLOW

Water Jacket type 3005A	
Normal water flow	11 gal. per min.
Pressure drop for normal flow	14 lb. per sq. in.
Maximum water pressure	50 lb. per sq. in.

DIMENSIONS.

Maximum overall length	520	mm.
Net weight	3.6	kg.

MAXIMUM RATINGS.

Maximum direct anode voltage	17,500	V
Maximum direct anode current	2.5	A
Maximum anode dissipation	20	kW
Maximum grid dissipation	1.2	kW

Single-ended Water-cooled R.F. Power Amplifier Triode

3Q/221E

TYPICAL OPERATING CONDITIONS

RADIO FREQUENCY

Class B Telephony. Modulated. Carrier applied to grid.

(Carrier conditions per valve for use with 100% modulation).

Direct anode voltage	15	kV
Grid bias	—600	V
Direct anode current	2.0	A
Power output	10	kW approx.

Class C Power Amplifier. Anode subject to modulation.

(Carrier conditions per valve for use with 100% modulation).

Direct anode voltage	15	kV
Grid bias	—2,000	V approx.
Direct anode current	2	A
Power output	20	kW approx.

Class C Power Amplifier or Oscillator, unmodulated.

Direct anode voltage	17	kV
Grid bias	—1,600	V approx.
Direct anode current	2.5	A
Power output	30	kW approx.

Single-ended Water-cooled R.F. Power Amplifier Triode

3Q/221E

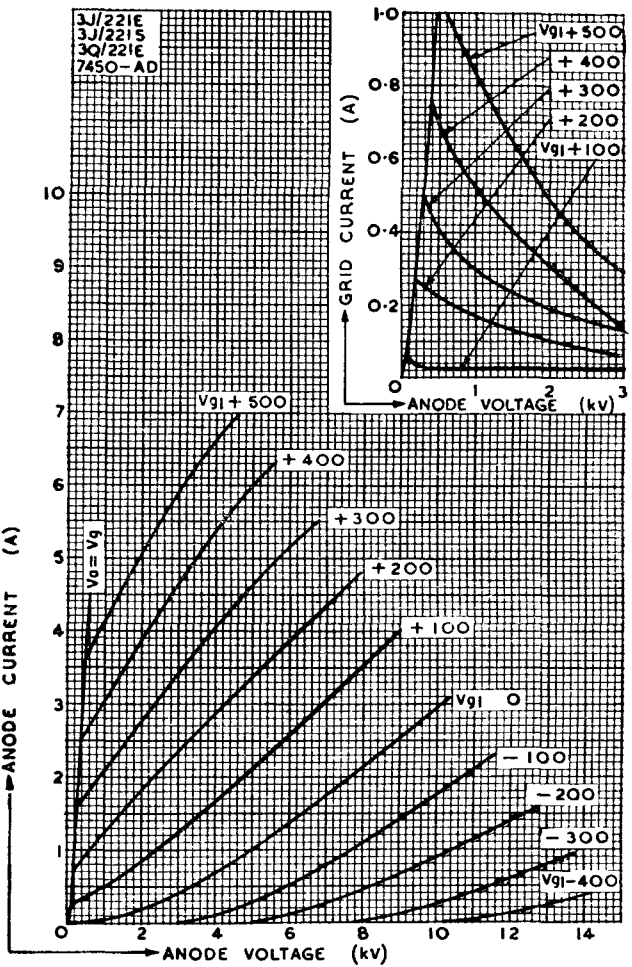

Single-ended Water-cooled R.F. Power Amplifier Triode
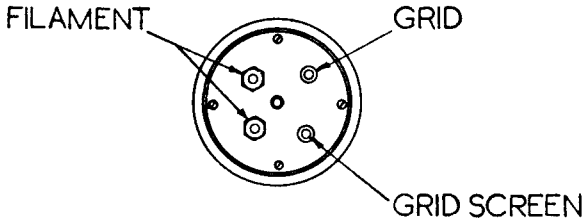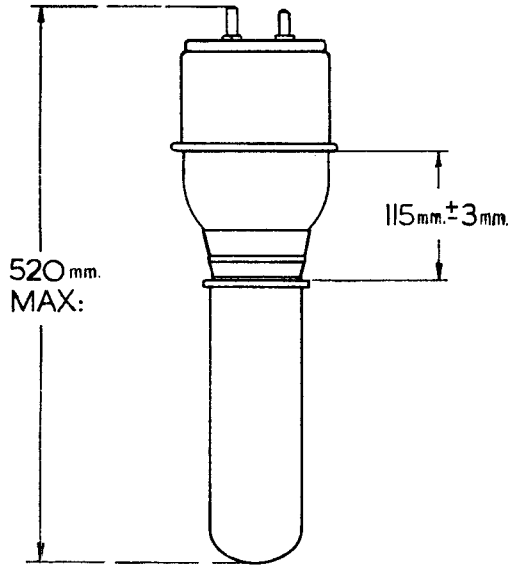
3Q/221E