SYLVANIA

engineering data service

SYLVANIA
3JP1
3JP7
3JP12

CHARACTERISTICS

GENERAL DATA

Focusing Method	Electrostatic
Deflecting Method	Electrostatic
Phosphor	P1
Fluorescence	Green
Persistence	Medium
Faceplate	Clear

ELECTRICAL DATA

Heater Voltage	6.3 Volts
Heater Current (approx.)	0.6 ±10% Ampere
Direct Interelectrode Capacitances (approx.)	
Cathode to All Other Electrodes	8 μμf
Grid No. 1 to All Other Electrodes	8 μμf
Between Deflecting Plates 1-2[1]	2.5 μμf
Between Deflecting Plates 3-4[1]	2 μμf
Deflecting Plate 1[1] to All Other Electrodes	8 μμf
Deflecting Plate 2[1] to All Other Electrodes	7 μμf
Deflecting Plate 3[1] to All Other Electrodes	7 μμf
Deflecting Plate 4[1] to All Other Electrodes	8 μμf

MECHANICAL DATA

Minimum Useful Screen Diameter	2¾ Inches
Bulb Contact (Recessed Small Ball Cap)	J1-22
Base (Medium Shell Diheptal 12-Pin)	B12-37
Basing	14J

RATINGS

MAXIMUM RATINGS (Absolute Maximum Values)

Anode No. 3 Voltage	4,400 Volts dc
Anode No. 2 Voltage	2,200 Volts dc
Anode No. 1 Voltage	1,100 Volts dc
Grid No. 1 Voltage	
Negative Bias Value	220 Volts dc
Positive Bias Value	0 Volts dc
Positive Peak Value	2 Volts
Peak Heater-Cathode Voltage	
Heater Negative with Respect to Cathode	140 Volts
Heater Positive with Respect to Cathode	140 Volts
Peak Voltage Between Anode No. 2 And Any Deflecting Plate	550 Volts

TYPICAL OPERATING CONDITIONS

Anode No. 3 Voltage[2]	3,000 Volts dc
Anode No. 2 Voltage[3]	1,500 Volts dc
Anode No. 1 Voltage	300 to 515 Volts dc
Grid No. 1 Voltage Required for Cutoff[4]	-22.5 to 67.5 Volts dc
Deflection Factor[5, 6]	
Deflecting Plates 1-2[7]	127-173 Volts dc/Inch
Deflecting Plates 3-4[8]	94-128 Volts dc/Inch

CIRCUIT VALUES

Grid No. 1 Circuit Resistance	1.5 Megohms Max.
Deflection Circuit Resistance	5.0 Megohms Max.

QUICK REFERENCE DATA

Special Purpose Tube
3" Direct Viewed
Round Glass Type
Electrostatic Deflection
Electrostatic Focus
Post Deflection Accelerator

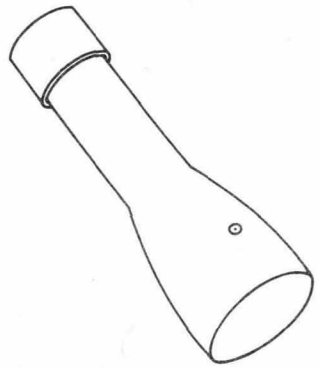

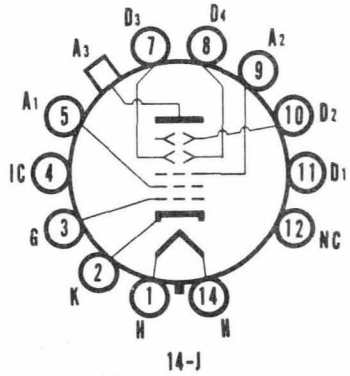

SYLVANIA ELECTRIC PRODUCTS INC.

TELEVISION PICTURE TUBE DIVISION

SENECA FALLS, NEW YORK

Prepared and Released By The
TECHNICAL PUBLICATIONS SECTION
EMPORIUM, PENNSYLVANIA

JULY, 1957

NOTES:

1. *Positive voltage on Pin No. 1 will deflect spot approximately toward Pin No. 5. Positive voltage on Pin No. 7 will deflect spot approximately toward Pin No. 2.*
2. *Anode No. 3 voltage should not be less than 3,000 volts for high speed scanning.*
3. *Recommended minimum value of Anode No. 2 Voltage.*
4. *Visual extinction of undeflected focused spot.*
5. *The plane through the tube axis and each of the following items may vary from the trace produced by Deflecting Plates 1-2 by the following angular tolerances measured about the tube axis; Pin 5 10 degrees; cap (on same side of tube as Pin 5) 10 degrees.*
6. *Angle between D1-D2 trace and D3-D4 trace is 90° ± 3°.*
7. *Deflecting Plates 1-2 are nearer the screen.*
8. *Deflecting Plates 3-4 are nearer the base.*

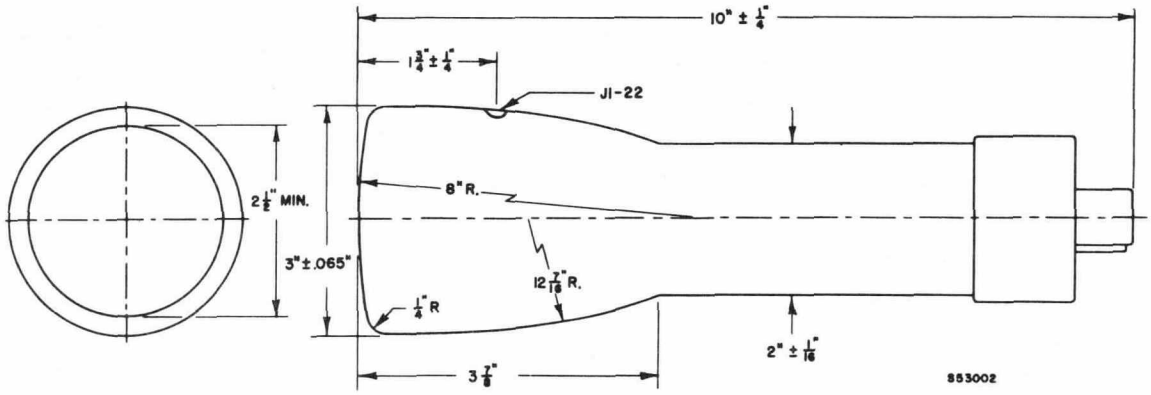

3JP7

The Type 3JP7 is identical to the Type 3JP1 except it has a phosphor of blue-white fluorescence, yellow phosphorescence, and long persistence.

3JP12

The Type 3JP12 is identical to the Type 3JP1 except it has an orange phosphor of Medium Long persistence.