SYLVANIA

# engineering data service

SYLVANIA
3JP1
3JP7
3JP12

## CHARACTERISTICS

### GENERAL DATA

| | |
|---|---|
| Focusing Method | Electrostatic |
| Deflecting Method | Electrostatic |
| Phosphor | P1 |
| Fluorescence | Green |
| Persistence | Medium |
| Faceplate | Clear |

### ELECTRICAL DATA

| | |
|---|---|
| Heater Voltage | 6.3 Volts |
| Heater Current (approx.) | 0.6 ±10% Ampere |
| Direct Interelectrode Capacitances (approx.) | |
| Cathode to All Other Electrodes | 8 μμf |
| Grid No. 1 to All Other Electrodes | 8 μμf |
| Between Deflecting Plates 1-2[1] | 2.5 μμf |
| Between Deflecting Plates 3-4[1] | 2 μμf |
| Deflecting Plate 1[1] to All Other Electrodes | 8 μμf |
| Deflecting Plate 2[1] to All Other Electrodes | 7 μμf |
| Deflecting Plate 3[1] to All Other Electrodes | 7 μμf |
| Deflecting Plate 4[1] to All Other Electrodes | 8 μμf |

### MECHANICAL DATA

| | |
|---|---|
| Minimum Useful Screen Diameter | 2¾ Inches |
| Bulb Contact (Recessed Small Ball Cap) | J1-22 |
| Base (Medium Shell Diheptal 12-Pin) | B12-37 |
| Basing | 14J |

## RATINGS

### MAXIMUM RATINGS (Absolute Maximum Values)

| | |
|---|---|
| Anode No. 3 Voltage | 4,400 Volts dc |
| Anode No. 2 Voltage | 2,200 Volts dc |
| Anode No. 1 Voltage | 1,100 Volts dc |
| Grid No. 1 Voltage | |
| Negative Bias Value | 220 Volts dc |
| Positive Bias Value | 0 Volts dc |
| Positive Peak Value | 2 Volts |
| Peak Heater-Cathode Voltage | |
| Heater Negative with Respect to Cathode | 140 Volts |
| Heater Positive with Respect to Cathode | 140 Volts |
| Peak Voltage Between Anode No. 2 And Any Deflecting Plate | 550 Volts |

### TYPICAL OPERATING CONDITIONS

| | |
|---|---|
| Anode No. 3 Voltage[2] | 3,000 Volts dc |
| Anode No. 2 Voltage[3] | 1,500 Volts dc |
| Anode No. 1 Voltage | 300 to 515 Volts dc |
| Grid No. 1 Voltage Required for Cutoff[4] | -22.5 to 67.5 Volts dc |
| Deflection Factor[5, 6] | |
| Deflecting Plates 1-2[7] | 127-173 Volts dc/Inch |
| Deflecting Plates 3-4[8] | 94-128 Volts dc/Inch |

### CIRCUIT VALUES

| | |
|---|---|
| Grid No. 1 Circuit Resistance | 1.5 Megohms Max. |
| Deflection Circuit Resistance | 5.0 Megohms Max. |

## QUICK REFERENCE DATA

Special Purpose Tube
3" Direct Viewed
Round Glass Type
Electrostatic Deflection
Electrostatic Focus
Post Deflection Accelerator

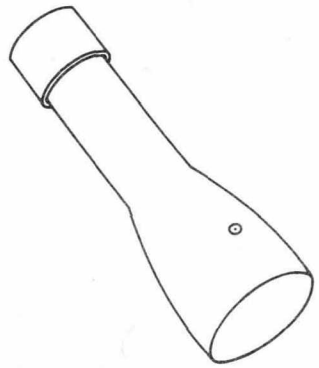

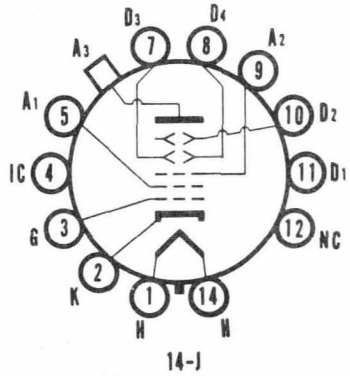



SYLVANIA ELECTRIC PRODUCTS INC.

TELEVISION PICTURE TUBE DIVISION

SENECA FALLS, NEW YORK



*Prepared and Released By The*
*TECHNICAL PUBLICATIONS SECTION*
*EMPORIUM, PENNSYLVANIA*

JULY, 1957

## NOTES:

1. *Positive voltage on Pin No. 1 will deflect spot approximately toward Pin No. 5. Positive voltage on Pin No. 7 will deflect spot approximately toward Pin No. 2.*
2. *Anode No. 3 voltage should not be less than 3,000 volts for high speed scanning.*
3. *Recommended minimum value of Anode No. 2 Voltage.*
4. *Visual extinction of undeflected focused spot.*
5. *The plane through the tube axis and each of the following items may vary from the trace produced by Deflecting Plates 1-2 by the following angular tolerances measured about the tube axis; Pin 5 10 degrees; cap (on same side of tube as Pin 5) 10 degrees.*
6. *Angle between D1-D2 trace and D3-D4 trace is 90° ± 3°.*
7. *Deflecting Plates 1-2 are nearer the screen.*
8. *Deflecting Plates 3-4 are nearer the base.*

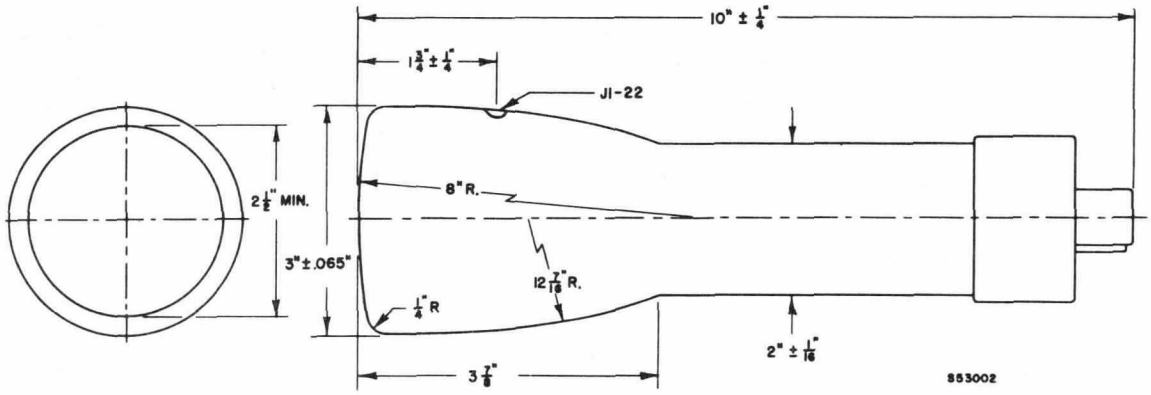


# 3JP7

The Type 3JP7 is identical to the Type 3JP1 except it has a phosphor of blue-white fluorescence, yellow phosphorescence, and long persistence.

# 3JP12

The Type 3JP12 is identical to the Type 3JP1 except it has an orange phosphor of Medium Long persistence.