Air-Blast-Cooled Triode

3J/170E

CATHODE.

Thoriated tungsten filament		
Voltage	10	V
Nominal current	22	A
Peak emission	6	A

RATING.

Amplification factor	measured at Va 4 kV	20	
Impedance	Ia 0.5A	3,300	Ω

DIRECT INTER-ELECTRODE CAPACITIES.

Grid to anode	6	pF
Grid to filament	9.5	pF
Anode to filament	1.5	pF

COOLING.

For anode dissipation of 3½ kW		
Volume of air at pressure of 1 inch of water.	300	cu. ft./min.
Maximum radiator core temperature	130°	C
Maximum ambient temperature	45°	C

DIMENSIONS.

Maximum overall length	225	mm.
Maximum diameter over radiator	155	mm.

MAXIMUM RATINGS.

Maximum direct anode voltage	6,000	V
Maximum direct anode current	1.25	A
Maximum anode dissipation	3½	kW
Maximum grid dissipation	150	W
Maximum frequency for above ratings	50	Mc/s.

Air-Blast-Cooled Triode

3J/170E

TYPICAL OPERATING CONDITIONS

RADIO FREQUENCY

Class B Telephony. Modulated Carrier applied to grid.
(Carrier conditions per valve for use with 100% modulation).

Direct anode voltage	5	kV
Grid bias	—260	V
Direct anode current	0.9	A
Peak R.F. grid voltage	960	V
Power output	1.4	kW

Class C Power Amplifier. Anode subject to modulation.
(Carrier conditions per valve for use with 100% modulation).

Direct anode voltage	4	kV
Grid bias	—900	V
Direct anode current	1.0	A
Peak R.F. grid voltage	1,500	V
* Direct grid current	0.230	A
Power output	2.5	kW

Class C. Power Amplifier or Oscillator, unmodulated.

Direct anode voltage	6	kV
Grid bias	—700	V
Direct anode current	1.25	A
Peak R.F. grid voltage	1,400	V
* Direct grid current	0.262	A appx.
Power output	5	kW. appx.

* Subject to wide variation, depending upon the impedance of the load circuit.

Air-Blast-Cooled Triode

3J/170E

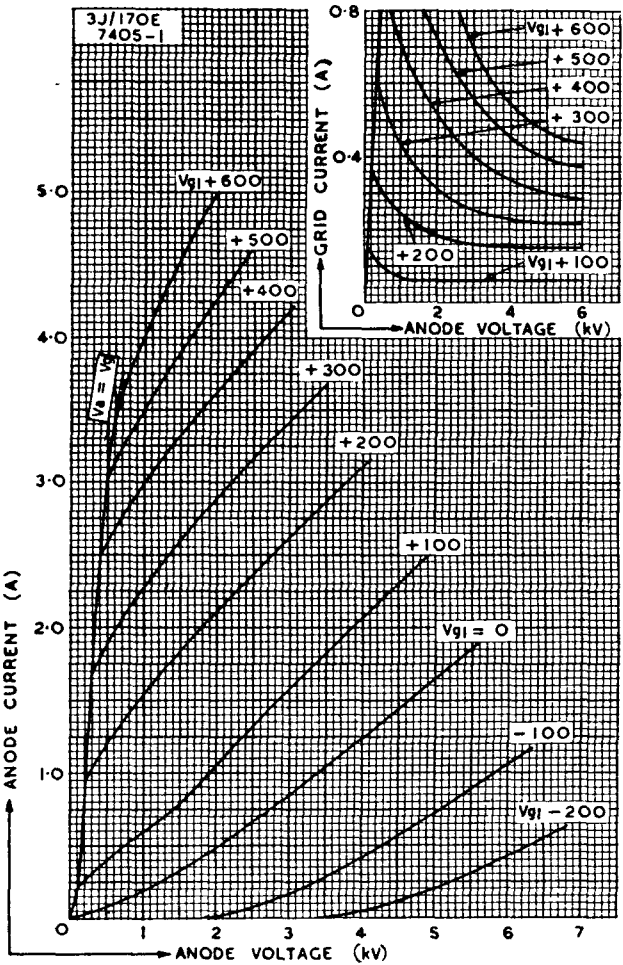

Air-Blast-Cooled Triode
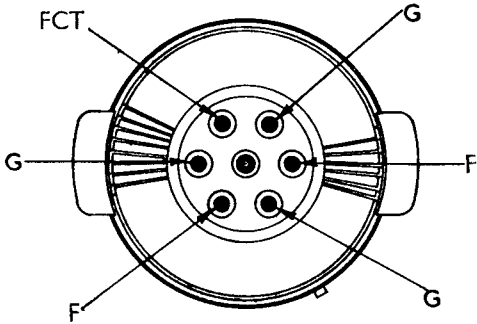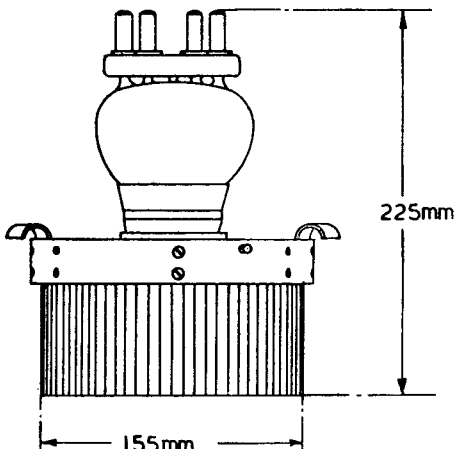
3J/170E