TOSHIBA HYDROGEN THYRATRON
3G49P/5949

Toshiba 3G49P/5949 is a hydrogen thyratron for switching service in rader modulator and other pulse applications. It is capable of switching a peak power of 6 MW at an average power of 6 kW.

3G49P/5949 has a hydrogen reservoir which assures freedom from failure due to gas clean-up. The reservoir compensates for the gas consumed during operation and permits the user to adjust the pressure within the tube to the most suitable volume for the perticular application.

GENERAL DATA

ELECTRICAL:

	Minimum	Bogie	Maximum	
Cathode ; Indirectly Heated Tied to the Heater Midpoint				
Heater Voltage	6.0	6.3	6.6	V
Heater Current (Ef=6.3V)	15	18.5	22	A
Reservoir Heater Voltage ([1])	3.0	-	5.5	V
Reservoir Heater Current (Eres=4.5V)..	2	-	5	A
Cathode and Reservoir Heating Time	900	-	-	
Anode Voltage Drop	-	150	250	V
Anode Delay Time	-	-	1.0	μs
Anode Current Time Jitter	-	0.005	0.01	μs

★ The information contained herein is presented only as a guide for the applications of our products. No responsibility is assumed by TOSHIBA for any infringements of patents or other rights of the third parties which may result from its use. No license is granted by implication or otherwise under any patent or patent rights of TOSHIBA or others.

★ The information contained herein may be changed without prior notice. It is therefore advisable to contact TOSHIBA before proceeding with the design of equipment incorporating this product.

No.ED-T100 1982-05-14

MECHANICAL:

Dimensions:	See Outline Drawing
Overall Length	305±13 mm
Maximum Diameter	84 mm
Base Number:	
Cap	A14S (JEDEC No. C1-5)
Base	E32S-1 (Equivalent JEDEC No.A5-97)
Recommended Socket:	
Cap	Toshiba VT-29061
Base	Toshiba VT-21031
Base Connections	See Outline Drawing
Colling (2)	Convection
Mounting Position	Any
Net Weight (Approx.)	860 g

RATINGS

ABSOLUTE MAXIMUM:

Maximum Peak Anode Voltage (3);		
Inverse	25,000	V
Forward	5% epy ∿ 25,000	V
Minimum Supply Voltage	5,000	V
Negative Grid Voltage (Before Conduction)	450	V
Maximum Anode Current:		
Peak	500	A
Average	0.5	A
RMS (4)	15	A
Averaging Time	1cycle	
Maximum Rate of Rise of Anode Current	2,500	A/s
Pulse Repetiting Rate (prr)(5)	2,000	pps
Operation Factor (6)	6.25×10^9	
Pulse Duration	6	μs
Ambient Temperature Limits	-55 ∿ +75	°C
Altitude	3,000	m

GRID DRIVE (7):

Grid Trigger Voltage (Peak)	550 ∿ 1,000	V
Maximum Rise Time	0.25	μs
Minimum Grid Pulse Duration	2	μs
Grid Drive Circuit Impedance	50 ∿ 200	Ω

Notes (1) The optimum reservoir voltage for operation at maximum tube voltage, maximum peak and average tube currents, and at a repetition corresponding to the rated operation factor is inscribed on the base of the tube, and must be held within ±5 percent. Applications involving operation at other conditions will necessitate the redetermination of the optimum reservoir voltage.

(2) Cooling of anode lead by forced convection permissible, but there shall be no air blast directly on the bulb.

(3) Instantaneous starting is not recommended. However, in case where it is necessary to apply anode voltage instantaneously, the maximum permissible forward starting voltage is 18,000 volts peak. The power-supply filter should be designed to limit the rate of application of this voltage to 450,000 volts per second.

The minimum inverse anode voltage permissible is 5 percent of the peak forward voltage and the maximum is 5000 volts during the first 25 microseconds following the anode pulse exclusive of a spike of 0.05 microsecond maximum duration.

(4) The root mean square anode current shall be computed as the square root of the product of peak current (ib) and the average current (Ib), i.e.

$$Irms = \sqrt{ib \times Ib}$$

(5) prr (pusle repetiting rate) depends on both peak forward anode voltage epy (V) and peak anode current ib (A). The figure given above is an example of epy and ib against maximum ratings. Actually, the design should be made within the limit of epy (V) × prr (pps) × ib (A) ≦ Operation Factor

Notes (6) Operation factor = epy (peak forward anode voltage) × ib (peak anode current) × prr (pulse repetition rate).

(7) Driver pulse measured at tube socket with the thyratron grid disconnected.

GENERAL OPERATIONAL RECOMMENDATION

1. High Voltage

Operating voltages for power tubes range from several hundred volts to higher than 50,000 volts. Since these voltage can be deadly, equipment must be designed so that one can not come in contact with high voltage.

2. X-RAY Radiation

High-vacuum tubes operating at voltage higher than 10 kilovolts produce progressively more dangerous X-ray radiation as the voltage is increased. X-ray shielding must be provided on all sides of tubes which operate above 10 kilovolts, to provide adequate protection through the tube's life. If there is any doubt as to the adequacy of shielding, an expert in this field should be contacted to perform an X-ray survey of the equipment.

3. High Temperature

Don't come in contact with the vacuum tubes, not only the period of the operation but also immediately after the removal of all tubes voltages becuase the temperature of the tube during the operation often exceeds 200°C.

DIMENSIONAL OUTLINE

3G49P/5949

Unit : mm

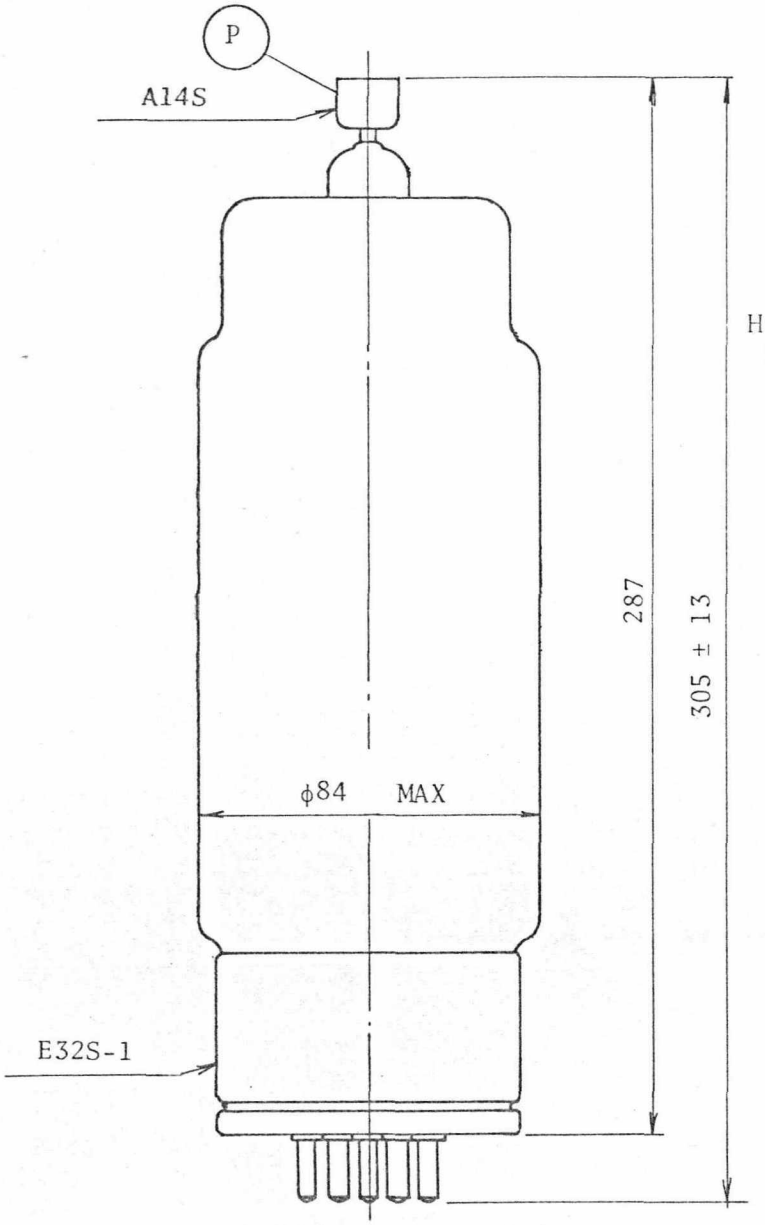

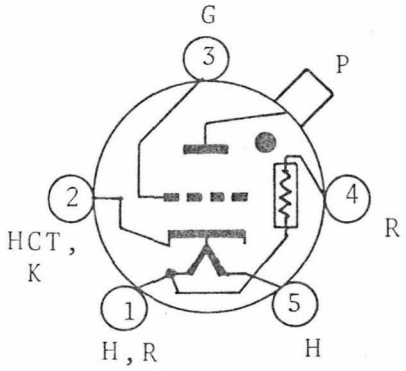

P: Anode

G: Grid

K: Cathode

H: Heater

HCT: Center of Heater
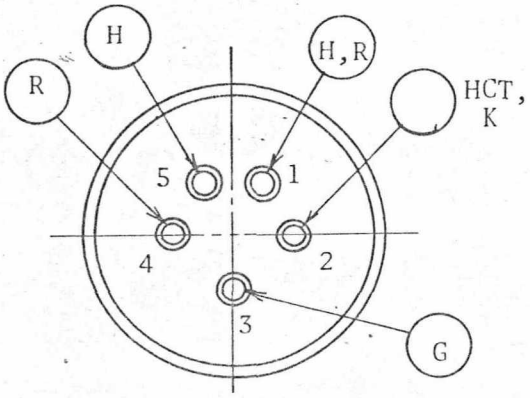
R: Reservoir