EIMAC

A Division of Varian Associates

SAN CARLOS, CALIFORNIA

3CX5000H3

INDUSTRIAL MEDIUM-MU AIR-COOLED POWER TRIODE

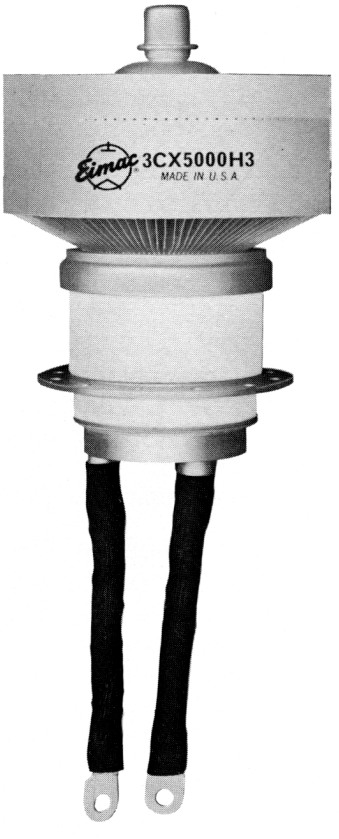

The EIMAC 3CX5000H3 is an air-cooled ceramic-metal power triode designed primarily for use in industrial radio-frequency heating services. Its air-cooled anode is conservatively rated at 5 kilowatts maximum plate dissipation with low pressure drop.

Input of 25 kilowatts is permissible up to 90 megahertz. Plentiful reserve emission is available from its 560 watt filament. The grid structure is rated at 150 watts making this tube an excellent choice for severe application.

GENERAL CHARACTERISTICS

ELECTRICAL

	Min.	*Nom.*	*Max.*	
Filament: Thoriated-Tungsten				
Voltage		7.5		Volts
Current	73		78	amps
Amplification Factor		20		
Interelectrode Capacitances, Grounded Cathode Connection:				
Input			53	$\mu\mu f$
Output			1.5	$\mu\mu f$
Grid-Plate			25	$\mu\mu f$
Frequency for Maximum Ratings			90	MHz

MECHANICAL

Base	See Outline
Operating Position	Vertical, base up or down
Cooling	Forced Air
Maximum Operating Temperatures	250°C
Maximum Dimensions:	
Height	See Outline
Diameter	See Outline
Net Weight	10 Pounds

THESE SPECIFICATIONS ARE BASED ON DATA APPLICABLE AT PRINTING DATE. SINCE EIMAC HAS A POLICY OF CONTINUING PRODUCT IMPROVEMENT, SPECIFICATIONS ARE SUBJECT TO CHANGE WITHOUT NOTICE.

(Effective 4-1-66) © 1966 Varian

Printed in U.S.A.

RF INDUSTRIAL OSCILLATOR
Class-C (Filtered DC Power Supply)

MAXIMUM RATINGS:

DC PLATE VOLTAGE	10,000 Volts
DC PLATE CURRENT	3.0 Amps
DC GRID VOLTAGE	—1000 Volts
DC GRID CURRENT	0.5 Amp
PLATE INPUT POWER	25 kW
PLATE DISSIPATION	5 kW

TYPICAL OPERATION*

DC Plate Voltage	7000	9000 Volts
DC Plate Current	2.65	2.52 Amps
DC Grid Voltage	—700	—900 Volts
DC Grid Current	0.192	0.184 Amps
Peak Positive Grid Voltage	230	230 Volts
Driving Power	179	208 Watts
Plate Input Power	18.55	22.7 kW
Plate Dissipation	4.1	4.1 kW
Plate Output Power	14.45	18.6 kW
Approximate Load Impedance	1245	1725 Ohms

*Loaded Conditions

Note: "TYPICAL OPERATION" data are obtained by calculation from published characteristic curves. No allowance for circuit losses has been made.

APPLICATION

ELECTRICAL

Filament

The rated filament voltage for the 3CX5000H3 is 7.5 volts. Filament voltage, as measured at the tube, must be maintained at 7.5 volts plus or minus five percent for maximum tube life and consistent performance.

Control Grid Operation

The grid current rating is 0.5 ampere dc. This value should not be exceeded for more than very short periods such as during tuning. Overcurrent protection in the grid circuit should be provided. Ordinarily it will not be necessary to operate with more than 0.25 amperes grid current to obtain reasonable efficiency. In industrial heating service with varying loads, grid current should be monitored continuously with a dc current meter. The maximum grid dissipation rating is 150 watts.

Plate Operation

Plate over-current protection should be provided to remove plate voltage quickly in the event of an overload or an arc-over at the load. In addition current limiting power supply resistors should be used. These precautions are especially important in industrial service with its wide variations in loading.

Spark gaps from plate to ground should be used to prevent transient voltages from flashing across the tube envelope during any fault conditions.

MECHANICAL

Mounting

The 3CX5000H3 must be mounted vertically, either base up or down. A grid contact flange is provided for bolting to a strap or a grid deck. Heavy flexible leads are provided for applying the filament voltage.

Cooling

The maximum temperature rating for the external surfaces of the 3CX5000H3 is 250°C. Sufficient forced-air cooling must be provided to keep the temperature of the anode core and the temperature of the ceramic-metal seals below 250°C. Tube life is usually prolonged if these areas are maintained at temperatures below this maximum rating. Minimum air-flow requirements to maintain anode-core and seal temperatures below 225°C with an inlet-air temperature of 50°C are tabulated for frequencies below 30 MHz.

MINIMUM AIR FLOW REQUIREMENTS
(Anode-to-Base Air Flow)

	Sea Level		5000 Feet	
Plate** Dissipation watts	Air Flow CFM	Pressure Drop inches water	Air Flow CFM	Pressure Drop inches water
4000	98	0.24	118	0.29
5000	152	0.49	182	0.59
6000	236	1.00	283	1.2

**Since the power dissipated by the filament is about 560 watts and since grid dissipation can, under some circumstances, represent another 150 watts, allowance has been made in preparing this tabulation for an additional 710 watts dissipation.

Additional stem cooling air must be provided. 8 CFM of air directed against the center filament contact ring ½" below the outer filament contact ring by an 1½" I.D. air duct arranged at a 45° angle with the center line of the tube will provide adequate cooling for 50°C ambient, 5000 ft. altitude, and 30 MHz or less.

Special Applications

If it is desired to operate this tube under conditions widely different from those given here, write to Power Grid Tube Division, EIMAC, Division of Varian, 301 Industrial Way, San Carlos, California 94070 for information and recommendations.

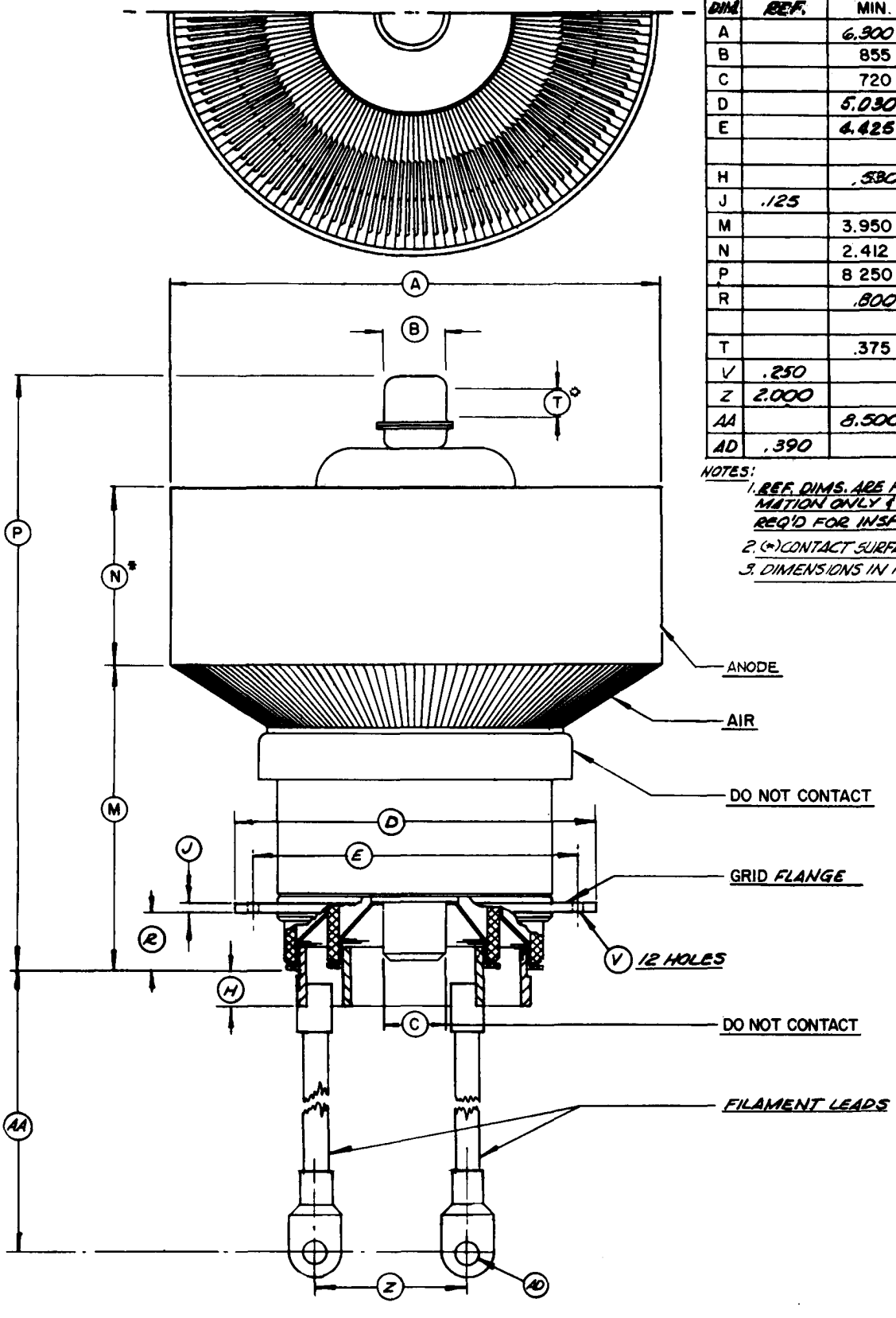

DIMENSION DATA			
DIM.	REF.	MIN.	MAX.
A		6.300	6.400
B		855	895
C		720	760
D		5.030	5.090
E		4.425	4.445
H		.590	.700
J	.125		
M		3.950	4.300
N		2.412	2.788
P		8 250	8.750
R		.800	.860
T		.375	
V	.250		
Z	2.000		
AA		8.500	9.000
AD	.390		

NOTES:
1. REF. DIMS. ARE FOR INFORMATION ONLY & ARE NOT REQ'D FOR INSP. PURPOSES.
2. (*) CONTACT SURFACE
3. DIMENSIONS IN INCHES

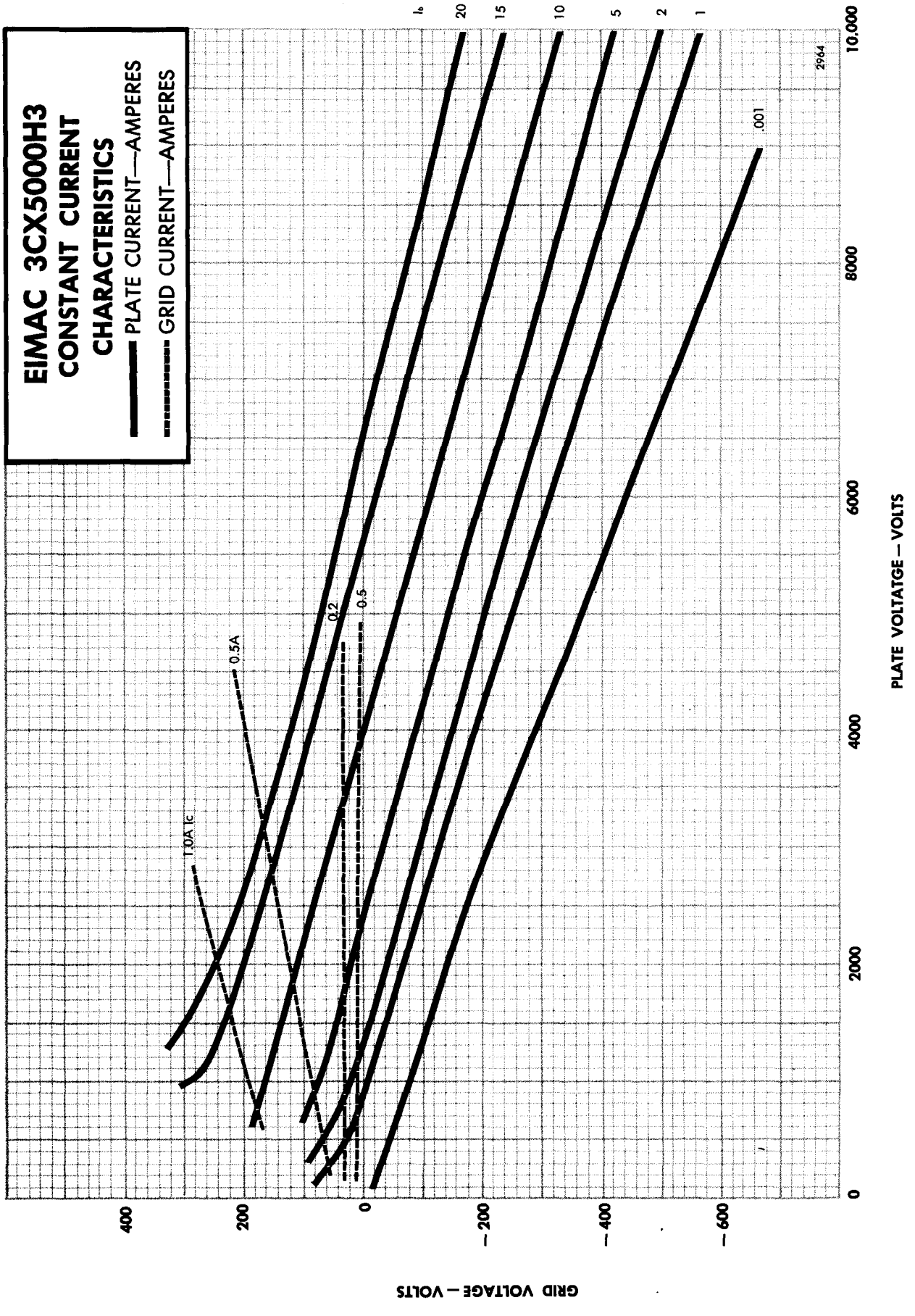
EIMAC 3CX5000H3
CONSTANT CURRENT
CHARACTERISTICS
PLATE CURRENT—AMPERES
GRID CURRENT—AMPERES
Ib
20
15
10
5
2
1
.001
0.5A
0.2
0.5
1.0A Ic
2964
400
200
0
−200
−400
−600
GRID VOLTAGE — VOLTS
0
2000
4000
6000
8000
10,000
PLATE VOLTATGE — VOLTS