TECHNICAL DATA

3CX5000A7
HIGH-MU
POWER TRIODE

The EIMAC 3CX5000A7 is a ceramic/metal high-mu power triode designed especially for use as a cathode-driven Class AB rf amplifier or Class C power amplifier. It is forced-air cooled, with an anode dissipation rating of 5000 watts.

The 3CX5000A7 makes use of a beam-forming cathode and control grid geometry to produce high gain, low grid interception, and outstanding intermodulation performance in linear amplifier service. These attributes make the tube well suited for cathode-driven circuitry, which reduces equipment cost and complexity.

The tube does not require a socket. It is designed to be bolted directly to the chassis by the grid flange. Cathode and heater connections are also made by bolting directly to the amplifier circuitry. This feature further reduces equipment cost and complexity.

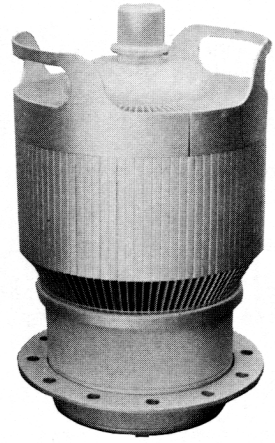

GENERAL CHARACTERISTICS[1]

ELECTRICAL

Cathode: Oxide-coated Unipotential		
Heater Voltage	10.0 ± 0.5	V
Heater Current, at 10.0 Volts	17.5	A
Minimum Cathode Warmup Time, at 10.0 Volts[2]	5	Min
Amplification Factor	200	
Maximum Frequency For Full Ratings	110	MHz
Direct Interelectrode Capacitance (grounded cathode connection)[3]		
Cin	56.5	pF
Cout	0.42	pF
Cgp	34.0	pF
Direct Interelectrode Capacitance (grounded grid connection)[3]		
Cin	56.5	pF
Cout	34.0	pF
Cpk	0.42	pF

1. Characteristics and operating values are estimated. These figures may change without notice as the result of additional data or product refinement. Varian EIMAC should be consulted before using this information for final equipment design.
2. Before high voltage and rf drive voltage are applied.
3. Capacitance values are for a cold tube as measured in accordance with EIA Standard RS-191 except no special shielding is used.

MECHANICAL

Overall Dimensions:	
Length	8.25 In; 20.96 mm
Diameter	4.94 In; 12.55 mm
Cooling	Forced Air
Net Weight (approximate)	9.5 lb; 4.3 kg
Recommended Air-System Chimney	EIMAC SK-306
Base	Designed for Direct Chassis Mounting

RADIO FREQUENCY POWER AMPLIFIER
CATHODE DRIVEN - Class AB Service

ABSOLUTE MAXIMUM RATINGS:

DC PLATE VOLTAGE	6500	VOLTS
DC PLATE CURRENT	2.5	AMPERES
PLATE DISSIPATION	5.0	KILOWATTS
GRID DISSIPATION	50	WATTS

* Will vary from tube to tube
\# Delivered to the load
§ Referenced aginst 1 tone of a 2-equal-tone signal

Typical Performance, to 30 MHz (measured data)

Plate Voltage	4.0	5.0	6.0	kVdc
Zero Sig.Plate Current	0.4	0.4	0.4	Adc
Max.Sig.Plate Current	1.25	1.45	1.55	Adc
Cathode Bias *	+9.0	+11.0	+12.0	Vdc
Grid Current *	50	35	25	mAdc
Driving Power *	120	160	190	W
Useful Power Output #	3000	4000	5000	W
Power Gain *	14.0	14.0	14.2	dB
Cathode Input Impedance	33	33	33	Ohms
Resonant Load Impedance	1800	1800	1800	Ohms
Intermod. Distortion * §				
3rd Order Products	-37	-35	-38	dB
5th Order Products	-45	-45	-46	dB

358690(Effective Sept 1984)
VA4741

Printed in U.S.A.

APPLICATION

MECHANICAL

MOUNTING - The 3CX5000A7 may be mounted in any position and should be protected from shock and vibration. The tube is designed to be bolted directly to the chassis in equipment designed for dc and rf grounded grid circuit configuration. The mounting may be insulated for other circuitry. A flange with threaded holes is provided for a low-inductance cathode connection. Similar provisions are made for the heater connections.

COOLING - The maximum temperature rating for the external surfaces of the tube is 250 Deg.C, and sufficient forced-air cooling must be used in all applications to keep the temperature of the anode (at the base of the cooling fins) and the temperature of the ceramic/metal seals comfortably below this rated maximum.
Cooling data shown is for air flow in a base-to-anode direction, and represents minimum anode cooling requirements. Pressure drop values are approximate.

Inlet Air Temperature = 25°C

Sea Level	Plate Diss. Watts	Flow Rate CFM	Press. Drop In.Water
	2000	29	0.1
	3000	63	0.3
	4000	114	0.8
	5000	209	2.2

5000 Feet	Plate Diss. Watts	Flow Rate CFM	Press. Drop In.Water
	2000	35	0.1
	3000	77	0.3
	4000	138	0.9
	5000	218	2.0

10,000 Feet	Plate Diss. Watts	Flow Rate CFM	Press. Drop In.Water
	2000	43	0.1
	3000	93	0.4
	4000	167	1.0
	5000	264	2.3

Inlet Air Temperature = 35°C

Sea Level	Plate Diss. Watts	Flow Rate CFM	Press. Drop In.Water
	2000	33	0.1
	3000	73	0.3
	4000	131	0.9
	5000	181	1.7

5000 Feet	Plate Diss. Watts	Flow Rate CFM	Press. Drop In.Water
	2000	40	0.1
	3000	88	0.4
	4000	159	1.1
	5000	253	2.5

10,000 Feet	Plate Diss. Watts	Flow Rate CFM	Press. Drop In.Water
	2000	48	0.1
	3000	107	0.4
	4000	192	1.3
	5000	306	3.0

Inlet Air Temperature = 50°C

Sea Level	Plate Diss. Watts	Flow Rate CFM	Press. Drop In.Water
	2000	41	0.1
	3000	92	0.5
	4000	165	1.3
	5000	262	3.1

5000 Feet	Plate Diss. Watts	Flow Rate CFM	Press. Drop In.Water
	2000	50	0.1
	3000	111	0.5
	4000	200	1.6
	5000	317	3.7

10,000 Feet	Plate Diss. Watts	Flow Rate CFM	Press. Drop In.Water
	2000	60	0.2
	3000	134	0.6
	4000	242	1.8
	5000	384	4.3

It is considered good engineering practice to design for a maximum anode core temperature of 225 °C, and temperature-sensitive paints are available for checking base and seal temperatures before any design is finalized. It is also considered good practice to allow for variables such as dirty air filters, rf seal heating, and the fact that the anode cooling fins may not be clean if the tube has been in service for some length of time.
Forced air cooling of the base is also required, with air directed past the seal areas. Special attention may be required in cooling the center of the stem (base), by means of special directors or some other provision. An air interlock system should be incorporated in the design to automatically remove all voltages from the tube in case of even partial failure of the tube cooling air.
Air flow must be applied before or simultaneously with the application of power, including the tube heater, and should normally be maintained for a short period of time after all power is removed.

ELECTRICAL

HEATER-CATHODE OPERATION - The rated heater voltage for the 3CX5000A7 is 10.0 volts and should be maintained within plus or minus 0.5 volt when good life and consistent performance are factors. Voltage should be measured with a known-accurate (preferably plus or minus one percent) rms-responding voltmeter.
Heater voltage should be applied for five minutes

(minimum) before high voltage is applied to the tube and any operation is attempted, to allow for cathode warmup to full temperature.

ABSOLUTE MAXIMUM RATINGS - Values shown for each type of service are based on the "absolute system" and are not to be exceeded under any service conditions. These ratings are limiting values outside which the serviceability of the tube may be impaired. In order not to exceed absolute ratings the equipment designer has the responsibility of determining an average design value for each rating below the absolute value of that rating by a safety factor so that the absolute values will never be exceeded under any usual conditions of supply-voltage variation, load variation, or manufacturing variation in the equipment itself. It does not necessarily follow that combinations of absolute maximum ratings can be attained simultaneously.

INPUT CIRCUIT - When this tube is operated as a grounded-grid rf amplifier, the use of a resonant tank in the cathode circuit is recommended in order to obtain greatest linearity and power output. For best results with a single-ended amplifier it is suggested that the cathode tank circuit operate at a "Q" of five or more.

FAULT PROTECTION - All power tubes operate at voltages which can cause severe damage in the event of an internal arc, especially in those cases where large amounts of stored energy or follow-on current are involved. Some means of protection is advised in all cases, and it is recommended that a series resistor be used in the anode circuit to limit peak current and help dissipate the energy in the event of a tube or circuit arc. A resistance of 10 ohms in the positive plate power supply lead, together with a protective spark gap such as the Siemens #B1-C145 connected between the cathode and grid will help protect the tube in the event of an internal arc. A maximum of 4 joules total energy may be permitted to dissipate into a grid-to-cathode arc. Amounts in excess of this will permanently damage the cathode or grid structure.

HIGH VOLTAGE - Normal operating voltages used with this tube are deadly, and the equipment must be designed properly and operating precautions must be followed. Design all equipment so that no one can come in contact with high voltages. All equipment must include safety enclosures for high-voltage circuits and terminals, with interlock switches to open primary circuits of the power supply and to discharge high-voltage capacitors whenever access doors are opened. Interlock switches must not be bypassed or "cheated" to allow operation with access doors open. Always remember that HIGH VOLTAGE CAN KILL.

RADIO-FREQUENCY RADIATION - Avoid exposure to strong rf fields even at relatively low frequency. Absorption of rf energy by human tissue is dependent on frequency. Under 300 MHz most of the energy will pass completely through the human body with little attenuation or heating affect. Public health agencies are concerned with the hazard even at these frequencies. OSHA (Occupational Safety and Health Administration) recommends that prolonged exposure to rf radiation should be limited to 10 milliwatts per square centimeter.

SPECIAL APPLICATIONS - When it is desired to operate this tube under conditions widely different from those listed here, write to Varian EIMAC; attn: Product Manager; 301 Industrial Way; San Carlos, CA 94070 U.S.A.

OPERATING HAZARDS

PROPER USE AND SAFE OPERATING PRACTICES WITH RESPECT TO POWER TUBES ARE THE RESPONSIBILITY OF EQUIPMENT MANUFACTURERS AND USERS OF SUCH TUBES. ALL PERSONS WHO WORK WITH OR ARE EXPOSED TO POWER TUBES OR EQUIPMENT WHICH UTILIZES SUCH TUBES MUST TAKE PRECAUTIONS TO PROTECT THEMSELVES AGAINST POSSIBLE SERIOUS BODILY INJURY. DO NOT BE CARELESS AROUND SUCH PRODUCTS.

The operation of this tube may involve the following hazards, any one of which, in the absence of safe operating practices and precautions, could result in serious harm to personnel:

a. HIGH VOLTAGE - Normal operating voltages can be deadly. Remember that HIGH VOLTAGE CAN KILL.

b. LOW-VOLTAGE HIGH-CURRENT CIRCUITS - Personal jewelry, such as rings, should not be worn when working with filament contacts or connectors as a short circuit can produce very high current and melting, resulting in severe burns.

c. RF RADIATION - Avoid exposure to strong rf fields even at relatively low frequencies. The danger is more severe at UHF and microwave frequencies and can cause serious bodily and eye injuries. CARDIAC PACEMAKERS MAY BE EFFECTED.

d. HOT SURFACES - Surfaces of tubes can reach temperatures of several hundred °C and cause serious burns if touched for several minutes after all power is removed.

Please review the detailed operating hazards sheet enclosed with each tube, or request a copy from: Varian EIMAC, Power Grid Application Engineering, 301 Industrial Way, San Carlos CA 94070.

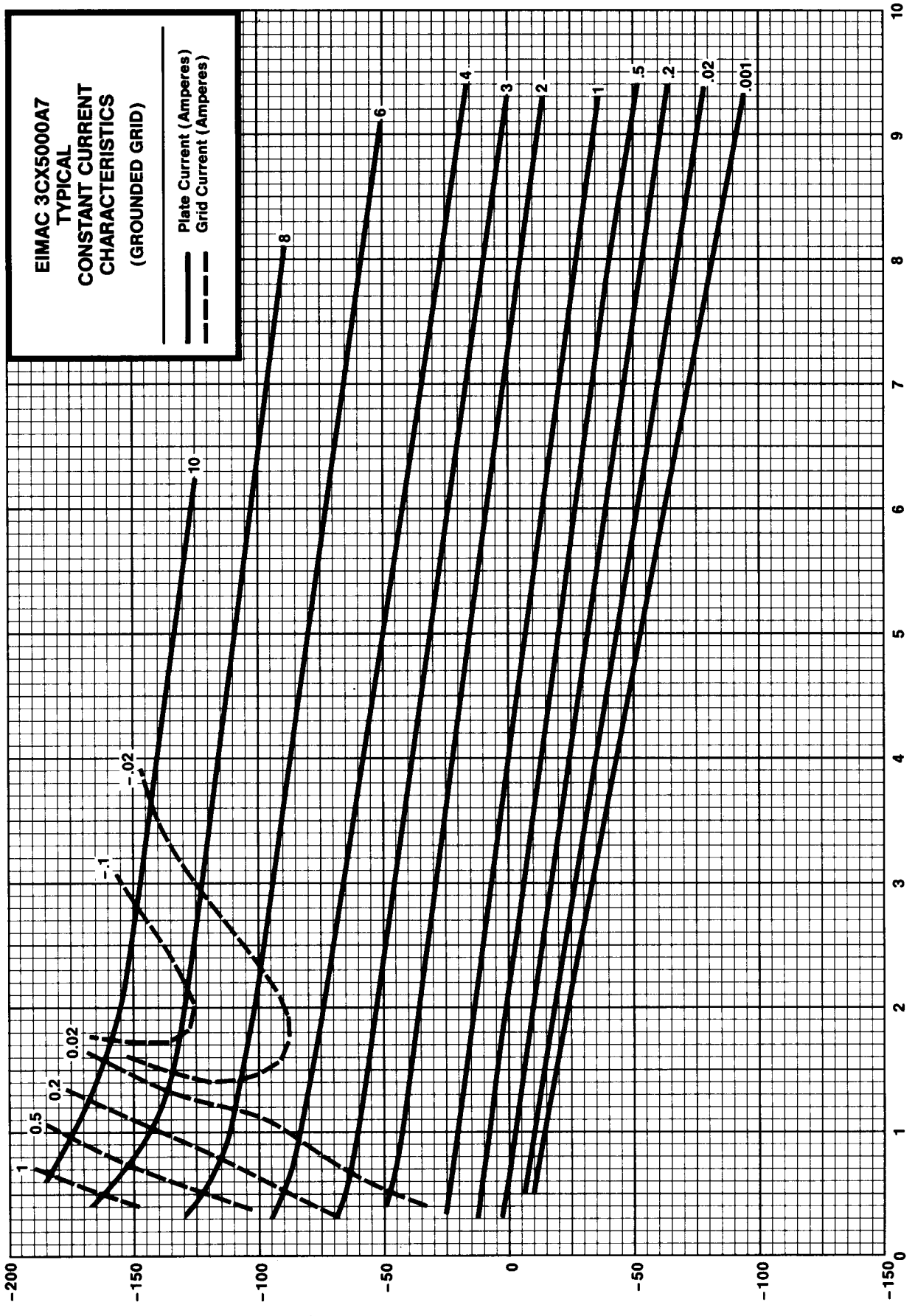
EIMAC 3CX5000A7
TYPICAL
CONSTANT CURRENT
CHARACTERISTICS
(GROUNDED GRID)
Plate Current (Amperes)
Grid Current (Amperes)
10
8
6
4
3
2
1
.5
.2
.02
.001
-.02
-.1
1
0.5
0.2
0.02
-200
-150
-100
-50
0
-50
-100
-150
0
1
2
3
4
5
6
7
8
9
10
CATHODE TO GRID VOLTAGE (V)
PLATE TO GRID VOLTAGE (KV)

CURVE #5311

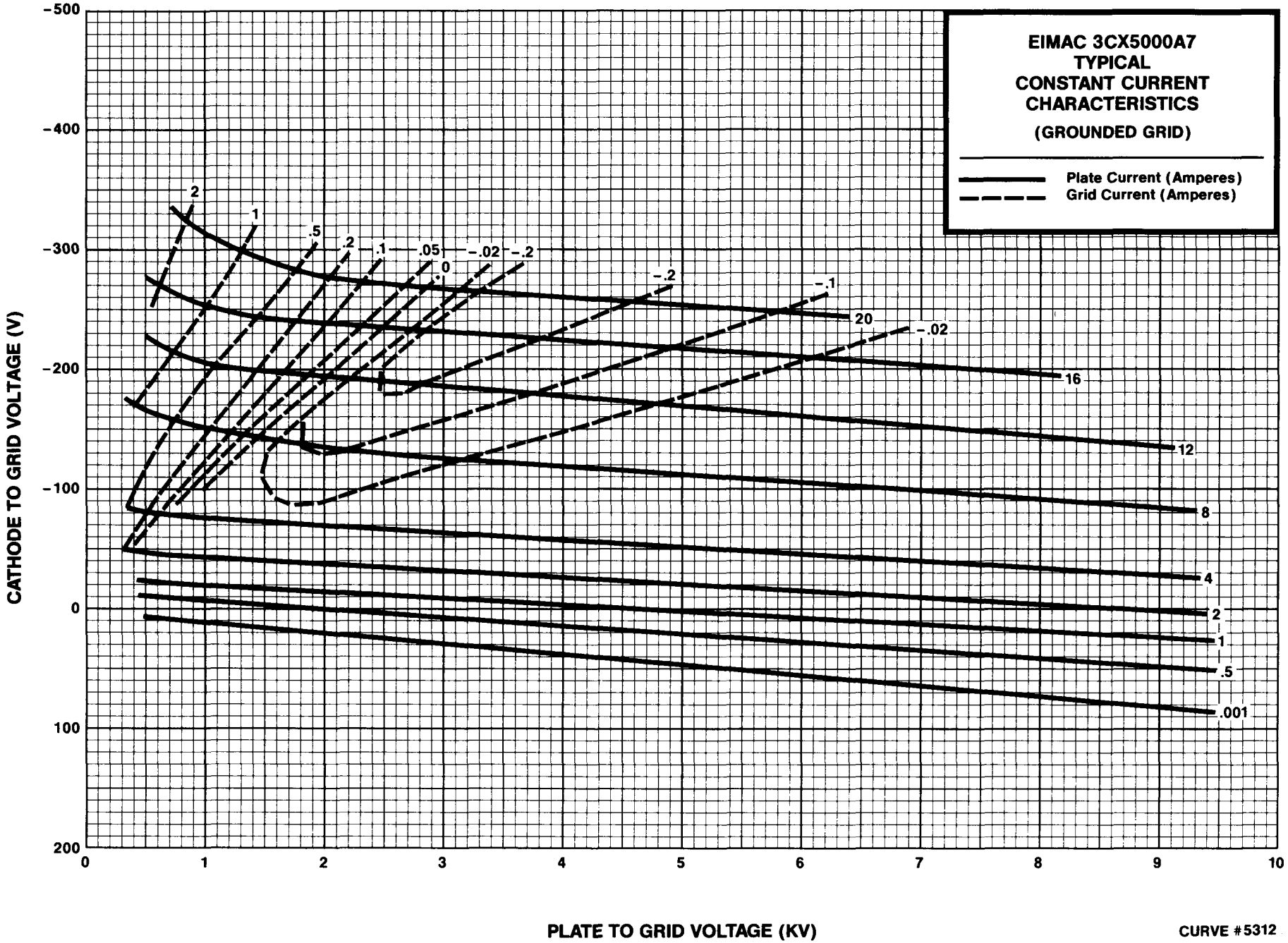
EIMAC 3CX5000A7
TYPICAL
CONSTANT CURRENT
CHARACTERISTICS
(GROUNDED GRID)
Plate Current (Amperes)
Grid Current (Amperes)
CATHODE TO GRID VOLTAGE (V)
PLATE TO GRID VOLTAGE (KV)
-500
-400
-300
-200
-100
0
100
200
0
1
2
3
4
5
6
7
8
9
10
2
1
.5
.2
.1
.05
0
-.02
-.2
-.2
-.1
-.02
20
16
12
8
4
2
1
.5
.001

CURVE #5312

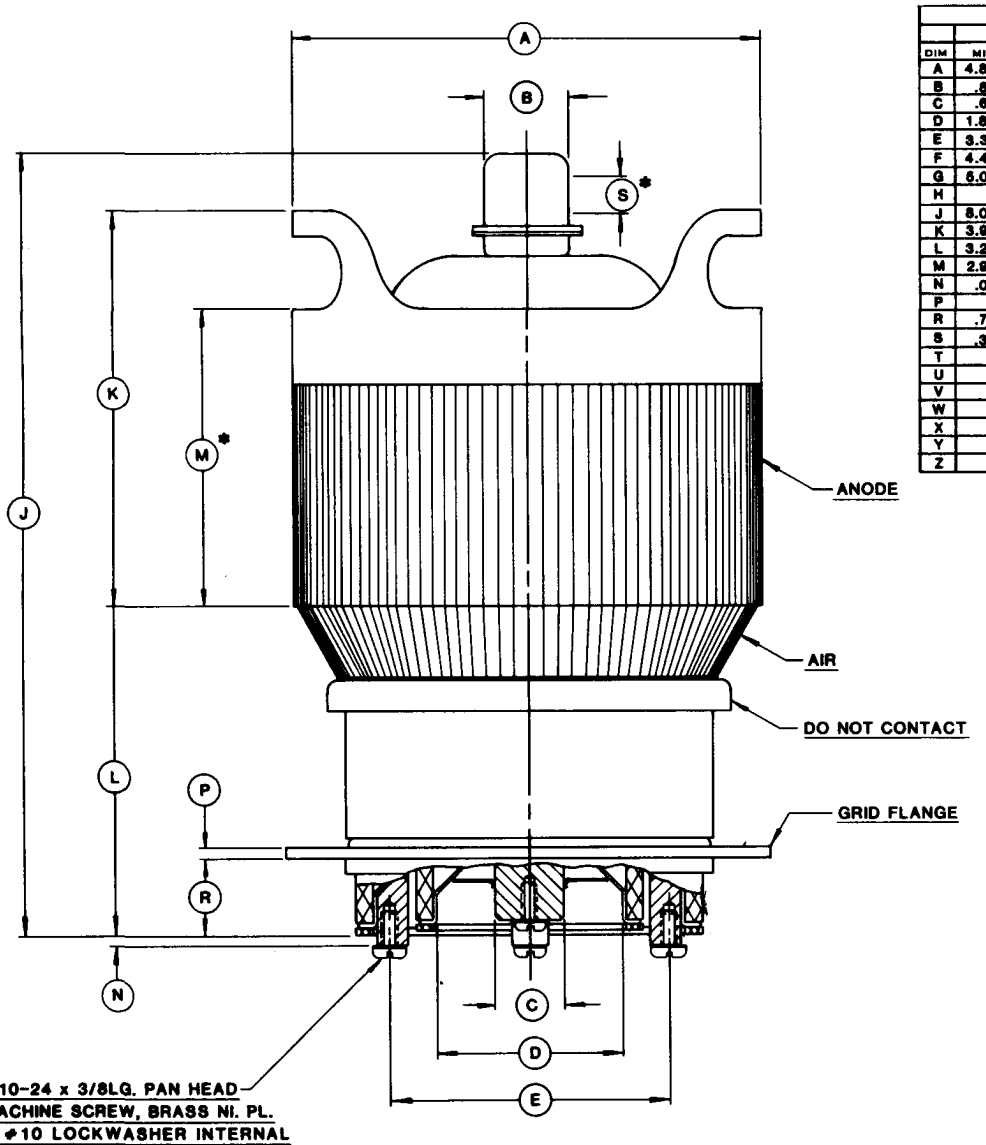

DIMENSIONAL DATA						
	INCHES			MILLIMETERS		
DIM	MIN	MAX	REF.	MIN.	MAX	REF
A	4.812	4.938		122.22	125.43	
B	.855	.895		21.72	22.73	
C	.600	.760		15.24	19.30	
D	1.896	1.936		48.16	49.17	
E	3.326	3.450		84.48	87.63	
F	4.425	4.445		112.40	122.90	
G	5.030	5.090		127.76	129.29	
H			.265			6.73
J	8.017	8.267		203.63	209.98	
K	3.925	4.299		99.70	109.19	
L	3.223	3.597		81.86	91.36	
M	2.925	3.299		74.30	83.79	
N	.093	.156		2.36	3.96	
P			.125			3.18
R	.721	.845		18.31	21.46	
S	.375			9.53		
T						
U						
V						
W						
X						
Y						
Z						

NOTES:
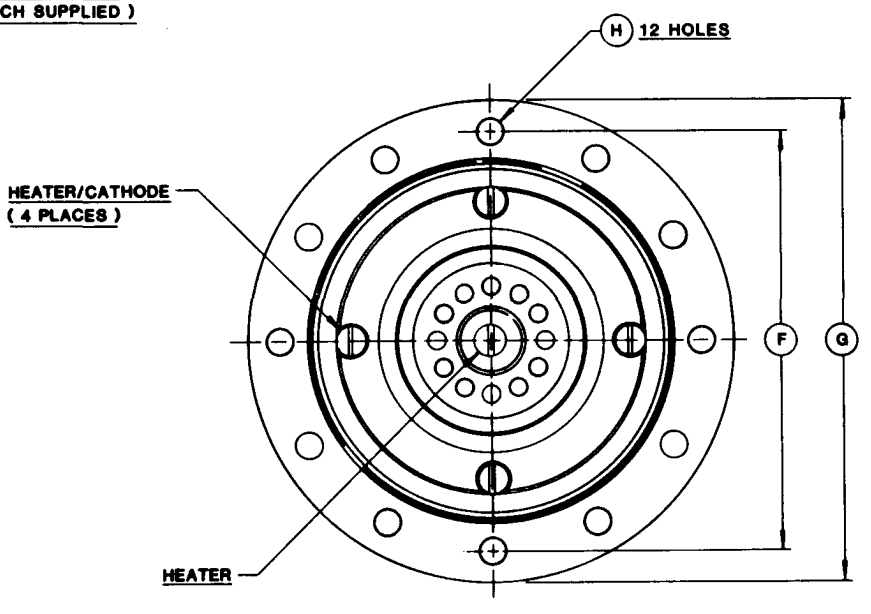
1. REF DIMENSIONS ARE FOR INFO ONLY & ARE NOT REQUIRED FOR INSPECTION PURPOSES.
2. (*) CONTACT SURFACE