3CX2500H3

MEDIUM-MU
AIR-COOLED
POWER TRIODE

TECHNICAL DATA

The EIMAC 3CX2500H3 is a ceramic/metal, forced air cooled, external anode power triode designed primarily for use in industrial radio-frequency heating services. Its anode is conservatively rated at 2.5 kilowatts of plate dissipation with low air flow and pressure drop.

Input of 12.5 kilowatts is permissable up to 75 megahertz. Plentiful reserve emission is available from its 390 watt filament. The grid structure is rated at 150 watts making this tube an excellent choice for severe applications.

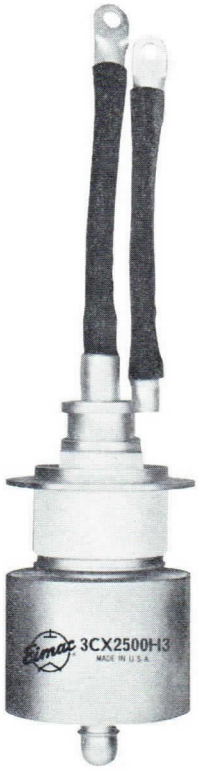

GENERAL CHARACTERISTICS[1]

ELECTRICAL

Filament: Thoriated Tungsten	
Voltage	7.5 ± 0.37 V
Current, at 7.5 volts	50 A
Amplification Factor (Average)	20
Direct Interelectrode Capacitance (grounded cathode)[2]	
Input	35.0 pF
Output	0.9 pF
Feedback	20.0 pF
Frequency of Maximum Rating:	
CW	75 MHz

1. Characteristics and operating values are based upon performance tests. These figures may change without notice as the result of additional data or product refinement. EIMAC Division of Varian should be consulted before using this information for final equipment design.
2. Capacitance values are for a cold tube as measured in a special shielded fixture.

MECHANICAL

Maximum Overall Dimensions:	
Length (excluding leads)	9.000 in; 228.60 mm
Diameter	4.250 in; 107.95 mm
Net Weight	6.5 lb; 14.3 kg
Operating Position	Vertical, base up or down
Maximum Operating Temperature:	
Ceramic/Metal Seals	250°C
Cooling	Forced Air
Base	See Outline

(Effective 2-1-71) © by Varian

Printed in U.S.A.

RADIO FREQUENCY INDUSTRIAL OSCILLATOR
Class C (Filtered DC Power Supply)

ABSOLUTE MAXIMUM RATINGS

DC PLATE VOLTAGE	6000	VOLTS
DC GRID VOLTAGE	-1000	VOLTS
DC PLATE CURRENT	2.5	AMPERES
PLATE DISSIPATION	2500	WATTS
PLATE INPUT POWER	12.5	kW
DC GRID CURRENT	0.4	AMPERE

TYPICAL OPERATION (Frequencies to 75 MHz)[2]

Plate Voltage	4000	6000	Vdc
Grid Voltage	-300	-500	Vdc
Plate Current	2.50	2.08	Adc
Grid Current[1]	0.245	0.180	mAdc
Peak rf Grid Voltage[1]	280	265	v
Calculated Driving Power[1]	142	136	W
Plate Input Power	10.0	12.5	kW
Plate Dissipation	2.5	2.5	W
Plate Output Power	7.5	10.0	W
Resonant Load Impedance	910	1625	Ω

1. Approximate value.
2. Loaded Conditions

NOTE: TYPICAL OPERATION data are obtained from direct measurement or by calculation from published characteristic curves. Adjustment of the rf grid voltage to obtain the specified plate current at the specified bias, screen and plate voltages is assumed. If this procedure is followed, there will be little variation in output power when the tube is changed, even though there may be some variation in grid and screen current. The grid and screen currents which result when the desired plate current is obtained are incidental and vary from tube to tube. These current variations cause no difficulty so long as the circuit maintains the correct voltage in the presence of the variations in current. In the case of Class C Service, if grid bias is obtained principally by means of a grid resistor, the resistor must be adjustable to obtain the required bias voltage when the correct rf grid voltage is applied.

RANGE VALUES FOR EQUIPMENT DESIGN

	Min.	Max.	
Filament: Current at 7.5 volts	48	53	A
Interelectrode Capacitance[1] (grounded filament connection)			
Input	29.2	40.2	pF
Output	0.6	1.2	pF
Feedback	16.8	23.2	pF

1. Capacitance values are for a cold tube as measured in a shielded fixture.

APPLICATION

MECHANICAL

MOUNTING - The 3CX2500H3 must be mounted vertically either base up or down. A mounting flange is provided on the grid terminal to allow bolting the tube to a grid deck or a strap. Filament voltage is applied through two heavy flexible leads.

COOLING - Forced-air cooling must be provided to hold the ceramic/metal seals and anode core temperature below the maximum rating of 250°C. At ambient temperatures above 50°C, at higher altitudes and at operating temperatures above 30 MHz, additional air flow must be provided. Sea level and 5000 foot altitude air flow requirements to maintain seal temperatures below 200°C in 50°C ambient air are tabulated below (for operation below 30 MHz).

Anode-to-Base Air Flow				
	Sea Level		5000 Feet	
Anode Dissipation watts	Air Flow CFM	Pressure Drop Inches Water	Air Flow CFM	Pressure Drop Inches Water
1500	33	0.6	40	0.74
2500	66	1.25	79	1.49

Base-to-Anode Air Flow				
	Sea Level		5000 Feet	
Anode Dissipation watts	Air Flow CFM	Pressure Drop Inches Water	Air Flow CFM	Pressure Drop Inches Water
1500	32	0.6	39	0.74
2500	57	1.0	68	1.23

*Since the power dissipated by the filament represents about 400 watts and since grid dissipation can, under some conditions represent another 150 watts, allowance has been made in preparing this tabulation for an additional 500 watts.

Additional stem cooling air must be provided. 14 CFM of air directed against the center rod ½'' below the outer filament contact ring by a 1½'' I.D. air duct arranged at a 45° angle with the center line of the tube will provide adequate cooling.

ELECTRICAL

FILAMENT - The rated filament voltage for the 3CX2500H3 is 7.5 volts. Filament voltage, as measured at the tube, must be maintained at 7.5 volts plus or minus five percent for maximum tube life and consistent performance.

GRID OPERATION - The grid current rating is 0.4 ampere dc. This value should not be exceeded for more than very short periods such as during tuning. Over-current protection in the grid circuit should be provided. Ordinarily it will not be necessary to operate with more than 0.275 ampere grid current to obtain reasonable efficiency. In industrial heating service with varying loads, grid current should be monitored continuously with a dc current meter. The maximum grid dissipation rating is 150 watts.

PLATE OPERATION - Maximum plate voltage rating of 6000 volts and maximum plate current of 2.5 amperes dc should not be applied simultaneously as rated plate dissipation may be exceeded. The 12.5 kilowatts input rating applies for Class C amplifier or oscillator service with no modulation.

Plate over-current protection should be provided to remove plate voltage quickly in the event of an overload or an arc-over at the load. In addition current limiting power supply resistors should be used. These precautions are especially important in industrial service with its wide variations in loading.

Spark gaps from plate to ground should be used to prevent voltages from flashing across the tube envelope during any fault conditions.

HIGH FREQUENCY OPERATION - The 3CX-2500H3 is usable to 110 MHz. At this frequency, plate voltage must be reduced to 4000 volts in Class C service.

HIGH VOLTAGE - The 3CX2500H3 operates at voltages which can be deadly, and the equipment must be designed properly and operating precautions must be followed. Equipment must be designed so that no one can come in contact with high voltages. All equipment must include safety enclosures for high-voltage circuits and terminals, with interlock switches to open the primary circuits of the power supplies and to discharge high voltage condensers whenever access doors are opened. Interlock switches must not be bypassed or "cheated" to allow operation with access doors open. Always remember that HIGH VOLTAGE CAN KILL.

SPECIAL APPLICATIONS - If it is desired to operate this tube under conditions widely different from those given here, write to Power Grid Tube Division, EIMAC Division of Varian, 301 Industrial Way, San Carlos, California 94070 for information and recommendations.

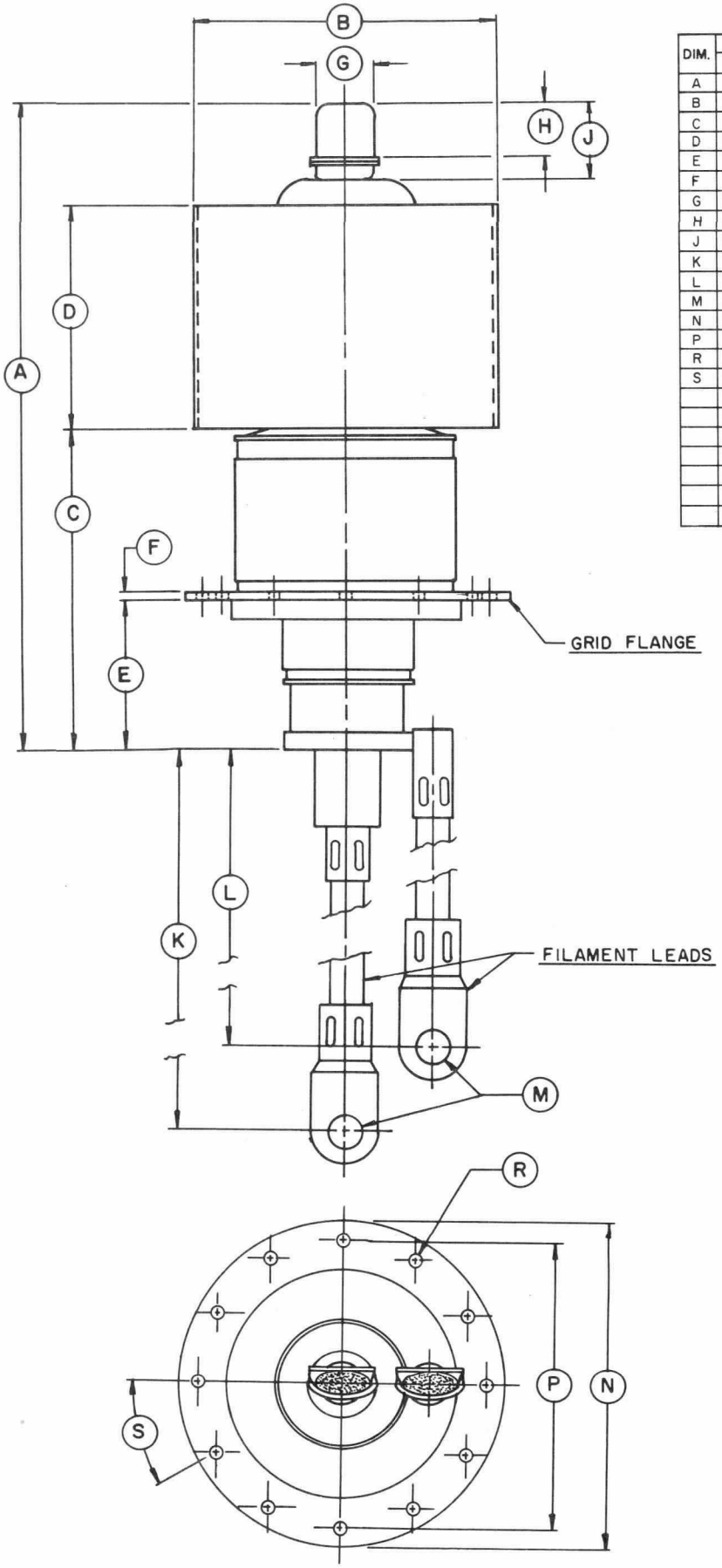

DIMENSIONAL DATA

DIM.	INCHES			MILLIMETERS		
	MIN.	MAX.	REF.	MIN.	MAX.	REF.
A	8.000	9.000	- -	203.20	228.60	- -
B	4.093	4.156	- -	103.96	105.56	- -
C	3.875	4.250	- -	98.43	107.95	- -
D	2.937	3.062	- -	74.60	77.77	- -
E	1.703	1.953	- -	43.26	49.61	- -
F	- -	- -	0.125	- -	- -	3.18
G	0.781	0.843	- -	19.84	21.41	- -
H	0.687	0.812	- -	17.45	20.62	- -
J	1.000	1.125	- -	25.40	28.58	- -
K	8.937	9.437	- -	227.00	239.70	- -
L	7.937	8.437	- -	201.60	214.30	- -
M	- -	- -	0.390	- -	- -	9.91
N	4.230	4.250	- -	107.44	107.95	- -
P	3.855	3.885	- -	97.92	98.68	- -
R	- -	- -	0.250	- -	- -	6.35
S	29°	31°	- -	29°	31°	- -

NOTES:

1. REFERENCE DIMENSIONS ARE FOR INFORMATION ONLY AND ARE NOT REQUIRED FOR INSPECTION PURPOSES.
2. THERE ARE 12 HOLES IN GRID FLANGE.
3. GRID FLANGE AND FILAMENT LEADS ARE TO BE ORIENTED AS SHOWN

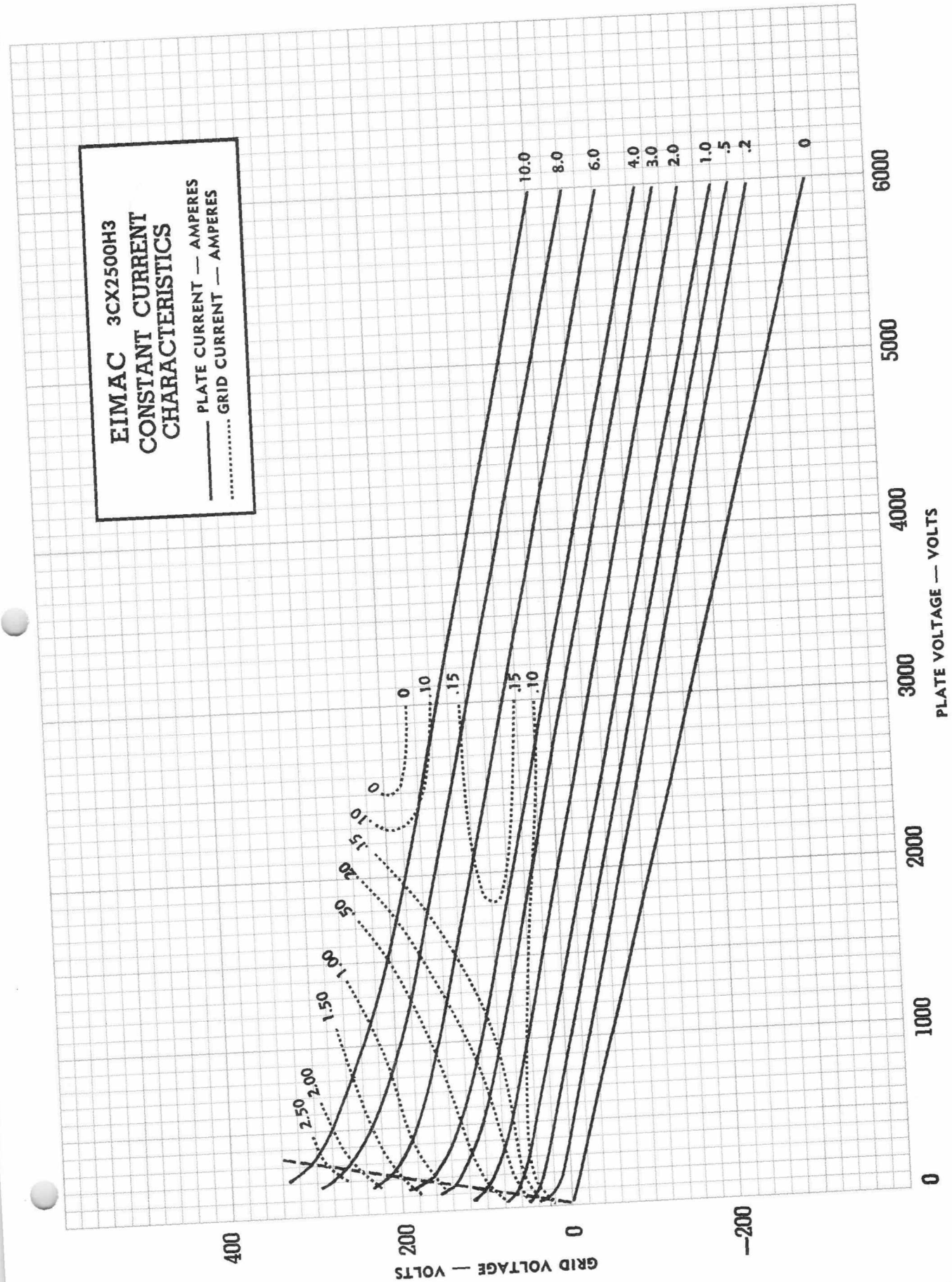
EIMAC 3CX2500H3
CONSTANT CURRENT
CHARACTERISTICS
PLATE CURRENT — AMPERES
GRID CURRENT — AMPERES
10.0
8.0
6.0
4.0
3.0
2.0
1.0
.5
.2
0
2.50
2.00
1.50
1.00
.50
.20
.15
.10
0
.10
.15
.15
.10
0
400
200
0
—200
GRID VOLTAGE — VOLTS
0
1000
2000
3000
4000
5000
6000
PLATE VOLTAGE — VOLTS