3CX20,000H3

TECHNICAL DATA

MEDIUM-MU
INDUSTRIAL TRIODE

The 3CX20,000H3 is a ceramic insulated medium-mu power triode with terminals arranged for direct mounting in industrial heating equipment without the use of a socket. The 3CX20,000H3 is recommended for use as an industrial oscillator in the LF to lower VHF range (30 KHz to 90 MHz). This triode is also recommended for the AM broadcast service as a modulator, modulated rf stage, or as a linear amplifier.

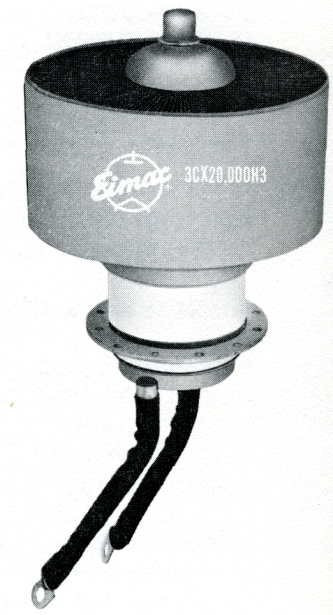

GENERAL CHARACTERISTICS[1]

ELECTRICAL

Filament: Thoriated Tungsten		
Voltage	10.0 ± 0.5	V
Current, at 10.0 volts	160	A
Direct Interelectrode Capacitance (grounded cathode)[2]		
Cin	70.0	pF
Cout	2.3	pF
Cgp	43.0	pF
Frequency of Maximum Rating:		
CW	90	MHz

1. Characteristics and operating values are based upon performance tests. These figures may change without notice as the result of additional data or product refinement. EIMAC Division of Varian should be consulted before using this information for final equipment design.

2. Capacitance values are for a cold tube as measured in a special shielded fixture in accordance with Electronic Industries Association Standard RS-191.

MECHANICAL

Overall Dimensions:	
Length (Not including filament leads)	10.60 in: 269.2 mm
Diameter	8.00 in; 203.2 mm
Net Weight	20.0 lb; 9.1 kg
Operating Position	Vertical, anode up or down
Maximum Operating Temperature:	
Ceramic/Metal Seals	250°C
Anode Core	250°C
Cooling	Forced air
Base	Flexible filament leads

(Effective 5-1-71) © by Varian

Printed in U.S.A.

RADIO FREQUENCY POWER AMPLIFIER OR OSCILLATOR

Class C Telegraphy, or Industrial Oscillator (Key-Down Conditions)

ABSOLUTE MAXIMUM RATINGS

DC PLATE VOLTAGE	12,000	VOLTS
DC GRID VOLTAGE	-2000	VOLTS
DC GRID CURRENT	1.5	AMPERES
DC PLATE CURRENT	8.0	AMPERES
PLATE DISSIPATION	20.0	KILOWATTS
GRID DISSIPATION	750	WATTS

TYPICAL OPERATION

Plate Voltage	7500	10,000	Vdc
Grid Voltage	-800	-900	Vdc
Plate Current	8.0	7.9	Adc
Grid Current[1]	1.4	.75	Adc
Peak rf Grid Voltage[1]	1200	1270	v
Calculated Driving Power[1]	1670	960	W
Plate Input Power	60	78	kW
Plate Dissipation	9.0	14.0	kW
Plate Output Power	51.0	64.0	kW
Resonant Load Impedance	480	640	Ω

1. Approximate value.

PLATE MODULATED RADIO FREQUENCY POWER AMPLIFIER-GRID DRIVEN

Class C Telephony (Carrier Conditions)

ABSOLUTE MAXIMUM RATINGS

DC PLATE VOLTAGE	6500	VOLTS
DC GRID VOLTAGE	-2000	VOLTS
DC PLATE CURRENT	5.5	AMPERES
PLATE DISSIPATION[1]	13.0	KILOWATTS
GRID DISSIPATION[2]	750	WATTS

1. Corresponds to 20,000 watts at 100% sine-wave modulation.
2. Average, with or without modulation.

TYPICAL OPERATION

Plate Voltage	6500	Vdc
Grid Voltage	-1300	Vdc
Plate Current	5.0	mAdc
Grid Current[1]	900	mAdc
Peak rf Grid Voltage[1]	1660	v
Calculated Driving Power	1500	W
Plate Input Power	32.5	kW
Plate Dissipation	5.0	kW
Plate Output Power	27.5	kW
Resonant Load Impedance	610	Ω

1. Approximate value.

AUDIO FREQUENCY POWER AMPLIFIER OR MODULATOR

Class AB, Grid Driven (Sinusoidal Wave)

ABSOLUTE MAXIMUM RATINGS (per tube)

DC PLATE VOLTAGE[1]	8000	VOLTS
DC PLATE CURRENT	8.0	AMPERES
PLATE DISSIPATION	20.0	KILOWATTS
GRID DISSIPATION	750	WATTS

1. Approximate value.

TYPICAL OPERATION (Two Tubes)

Plate Voltage	7500	Vdc
Grid Voltage[1/3]	-380	Vdc
Zero-Signal Plate Current	2.0	Adc
Max. Signal Plate Current	14.8	Adc
Max. Signal Grid Current[1]	1.26	Adc
Peak af Grid Voltage[2]	640	v
Driving Power[1]	800	W
Max. Signal Plate Dissipation	30.2	kW
Plate Output Power	80.0	kW
Load Resistance (plate to plate)	1140	Ω

2. Per Tube.
3. Adjust to give stated zero-signal plate current

NOTE: TYPICAL OPERATION data are obtained by measurement or calculation from published characteristic curves. Adjustment of the rf grid voltage to obtain the specified plate current at the specified bias, and plate voltages is assumed. If this procedure is followed, there will be little variation in output power when the tube is changed, even though there may be some variation in grid current. The grid current which results when the desired plate current is obtained is incidental and varies from tube to tube. These current variations cause no difficulty so long as the circuit maintains the correct voltage in the presence of the variations in current. If grid bias is obtained principally by means of a grid resistor, the resistor must be adjustable to obtain the required bias voltage when the correct rf grid voltage is applied.

RANGE VALUES FOR EQUIPMENT DESIGN

	Min.	Max.	
Heater: Current at 10.0 volts	152	168	A
Interelectrode Capacitances[1] (grounded cathode connection)			
Cin	65.0	75.0	pF
Cout	2.00	2.60	pF
Cgp	38.0	48.0	pF

1. Capacitance values are for a cold tube as measured in a special shielded fixture in accordance with Electronic Industries Association Standard RS-191.

APPLICATION

MECHANICAL

MOUNTING - The 3CX20,000H3 is intended for direct mounting in the equipment. It may be supported by the anode cooler or by the grid terminal flange. It must be mounted vertically, base up, or base down. The filament terminals are flexible leads approximately eight and three quarter inches in length. At higher operating frequencies it is suggested that the RF return to the filament be made to one or both of the heavy filament rings by suitable clamps. In circuits where circulating current may be large it is possible to make the grid connection through a wide strap bolted to one or more of the ¼ inch holes in the grid flange.

COOLING - The maximum temperature rating for the external surfaces of the 3CX20,000H3 is 250°C. Sufficient forced-air flow must be provided to keep the temperature of the anode at the base of the cooling fins and the temperature of the ceramic/metal seals below 250°C. Air flow requirements to maintain core temperature at 225°C in 50°C ambient air are tabulated below. These data are for air flowing in the base-to-anode direction.

The anode cooling air table assumes that the 3CX20,000H3 will be mounted in an enclosure with cooling air flowing into the enclosure and being exhausted through the anode cooler. If the air flow is reversed, that is, flow from the anode toward the base, approximately 20% additional air flow should be provided as indicated by 33% higher pressure drop across the anode cooler.

Approximately 100 CFM of air should be directed from a 1-½ inch diameter nozzle into the base of the tube to cool the filament terminals.

BASE TO ANODE AIR FLOW				
	Sea Level		10,000 Feet	
Plate * Dissipation(watts)	Air Flow (CFM)	Pressure Drop In. W.C.	Air Flow (CFM)	Pressure Drop In. W.C.
10,000	320	0.9	464	1.1
15,000	625	2.1	910	2.8
20,000	1010	4.3	1475	5.8

* Since the power dissipated by the filament represents about 1680 watts and since the grid dissipation can, under some conditions, represent another 750 watts, allowance has been made in preparing this tabulation for an additional 2430 watts dissipation.

The blower selected in a given application must be capable of supplying the desired air flow at a back pressure equal to the pressure drop shown above plus any drop encountered in ducts and filters.

At other altitudes and ambient temperatures, the flow rate must be modified to obtain equivalent cooling. The flow rate and corresponding pressure differential must be determined individually in such cases, using rated maximum temperatures as the criteria for satisfactory cooling.

ELECTRICAL

FILAMENT/CATHODE OPERATION - The filament voltage should be maintained within 5% of the nominal 10.0 V value, and for consistent tube life even closer control is advised. For most services the filament voltage may be less than the nominal 10.0 V for extended life.

The exact value about which to control should be determined by experiment in any given service.

GRID OPERATION - The grid dissipation rating of 750 watts must not be exceeded. For the convenience of industrial heating operators a maximum grid current of 1.5 amperes is specified. This provides reasonable assurance that the 750 watt rating is not exceeded.

PLATE OPERATION - Allowable anode dissipation depends on provision of sufficient cooling air for the temperature and altitude environment.
Anode dissipation will vary widely with load changes in industrial heating service. It is important that the power level be adjusted so that under no condition of the load cycle does the anode dissipation exceed the level established by the available cooling air.
When power tubes are operated in parallel, provision should be made to meter plate and grid currents individually. It is good practice also to provide separate plate current or cathode current overload relays when tubes are operated in parallel.

INTERELECTRODE CAPACITANCE - The actual internal interelectrode capacitance of a tube is influenced by many variables in most applications, such as stray capacitance to the chassis, capacitance added by the socket used, stray capacitance between tube terminals, and wiring effects. To control the actual capacitance values within the tube, as the key component involved, the industry and the Military Services use a standard test procedure as described in Electronic Industries Association Standard RS-191. This requires the use of specially constructed test fixtures which effectively shield all external tube leads from each other and eliminates any capacitance reading to "ground". The test is performed on a cold tube. Other factors being equal, controlling internal tube capacitance in this way normally assures good interchangeability of tubes over a period of time, even when the tube may be made by different manufacturers. The capacitance values shown in the manufacturer's technical data, or test specifications, normally are taken in accordance with Standard RS-191.

The equipment designer is therefore cautioned to make allowance for the actual capacitance values which will exist in any normal application. Measurements should be taken with the socket and mounting which represent approximate final layout if capacitance values are highly significant in the design.

HIGH VOLTAGE - Normal operating voltages used with the 3CX20,000H3 are deadly, and the equipment must be designed properly and operating precautions must be followed. Design all equipment so that no one can come in contact with high voltages. All equipment must include safety enclosures for high-voltage circuits and terminals, with interlock switches to open primary circuits of the power supply and to discharge high-voltage condensers whenever access doors are opened. Interlock switches must not be bypassed or "cheated" to allow operation with access doors open. Always remember that HIGH VOLTAGE CAN KILL.

X-RADIATION - High-vacuum tubes operating at voltages higher than 10kilovolts produce progressively more dangerous X-ray radiation as the voltage is increased. The 3CX20,000H3, operating at its rated voltages and currents, is a potential X-ray hazard. Only limited shielding is afforded by the tube envelope. Moreover, the X-ray radiation level can increase significantly with aging and gradual deterioration, due to leakage paths or emission characteristics as they are affected by the high voltage. X-ray shielding must be provided on all sides of tubes operating at these voltages to provide adequate protection throughout the tube's life. Periodic checks on the X-ray level should be made, and the tube should never be operated without adequate shielding in place when voltages above 10 kilovolts are in use. Lead glass, which attenuates X-rays, is available for viewing windows. If there is any doubt as to the requirement for or the adequacy of shielding, an expert in this field should be contacted to perform an X-ray survey of the equipment.

Operation of high-voltage equipment with interlock switches "cheated" and cabinet doors open in order to be better able to locate an equipment malfunction can result in serious X-ray exposure.

RADIO FREQUENCY RADIATION - Avoid exposure to strong rf fields even at relatively low frequency. Absorption of rf energy by human tissue is dependent on frequency. Under 30 MHz, most of the energy will pass completely through the human body with little attenuation or heating effect. Public health agencies are concerned with the hazard, however, even at

these frequencies, and it is worth noting that some commercial dielectric heating units actually operate at frequencies as low as the 13 and 27 MHz bands.

Many EIMAC power tubes, such as the 3CX-20,000H3 are specifically designed to generate or amplify radio frequency power. There may be a relatively strong rf field in the general proximity of the power tube and its associated circuitry --- the more power involved, the stronger the rf field. Proper enclosure design and efficient coupling of rf energy to the load will minimize the rf field in the vicinity of the power amplifier unit itself.

SPECIAL APPLICATIONS - If it is desired to operate this tube under conditions widely different from those given here, write to Power Grid Tube Product Manager, EIMAC Division of Varian, 301 Industrial Way, San Carlos, California 94070 for information and recommendations.

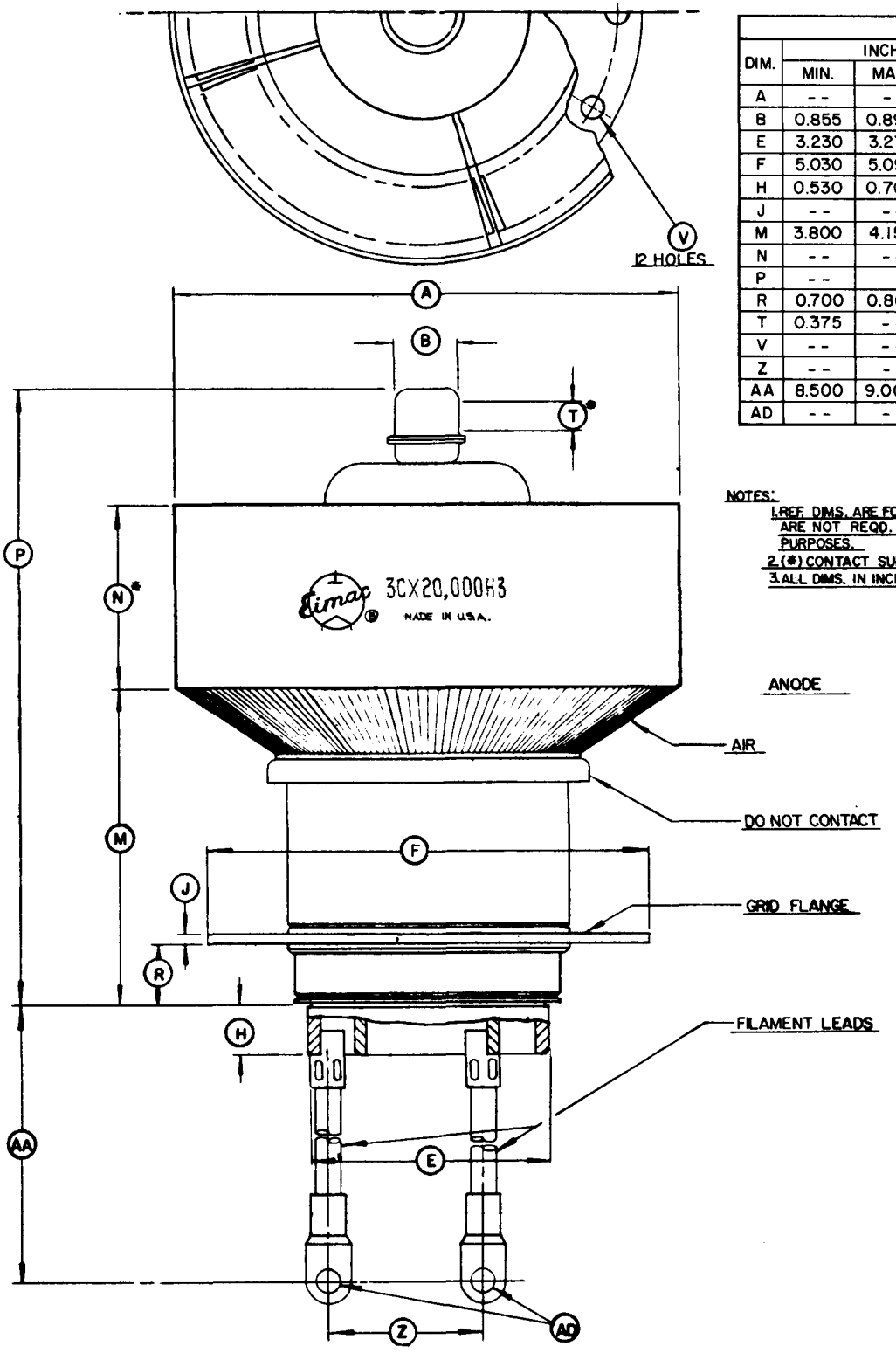

DIMENSIONAL DATA						
DIM.	INCHES			MILLIMETERS		
	MIN.	MAX.	REF.	MIN.	MAX.	REF.
A	--	--	8.00	--	--	203.0
B	0.855	0.895	--	21.70	22.70	--
E	3.230	3.270	--	82.00	83.00	--
F	5.030	5.090	--	128.00	128.70	--
H	0.530	0.700	--	13.50	17.70	--
J	--	--	0.125	--	--	3.20
M	3.800	4.150	--	96.50	105.00	--
N	--	--	4.000	--	--	115.00
P	--		10.000	--	--	254.00
R	0.700	0.860	--	17.80	21.80	--
T	0.375	--	--	9.50	--	--
V	--	--	0.265	--	--	6.70
Z	--	--	2.000	--	--	51.00
AA	8.500	9.000	--	215.00	228.00	--
AD	--	--	0.390	--	--	9.90

NOTES:
1. REF. DIMS. ARE FOR INFO. ONLY & ARE NOT REQD. FOR INSPECTION PURPOSES.
2. (*) CONTACT SURFACES
3. ALL DIMS. IN INCHES

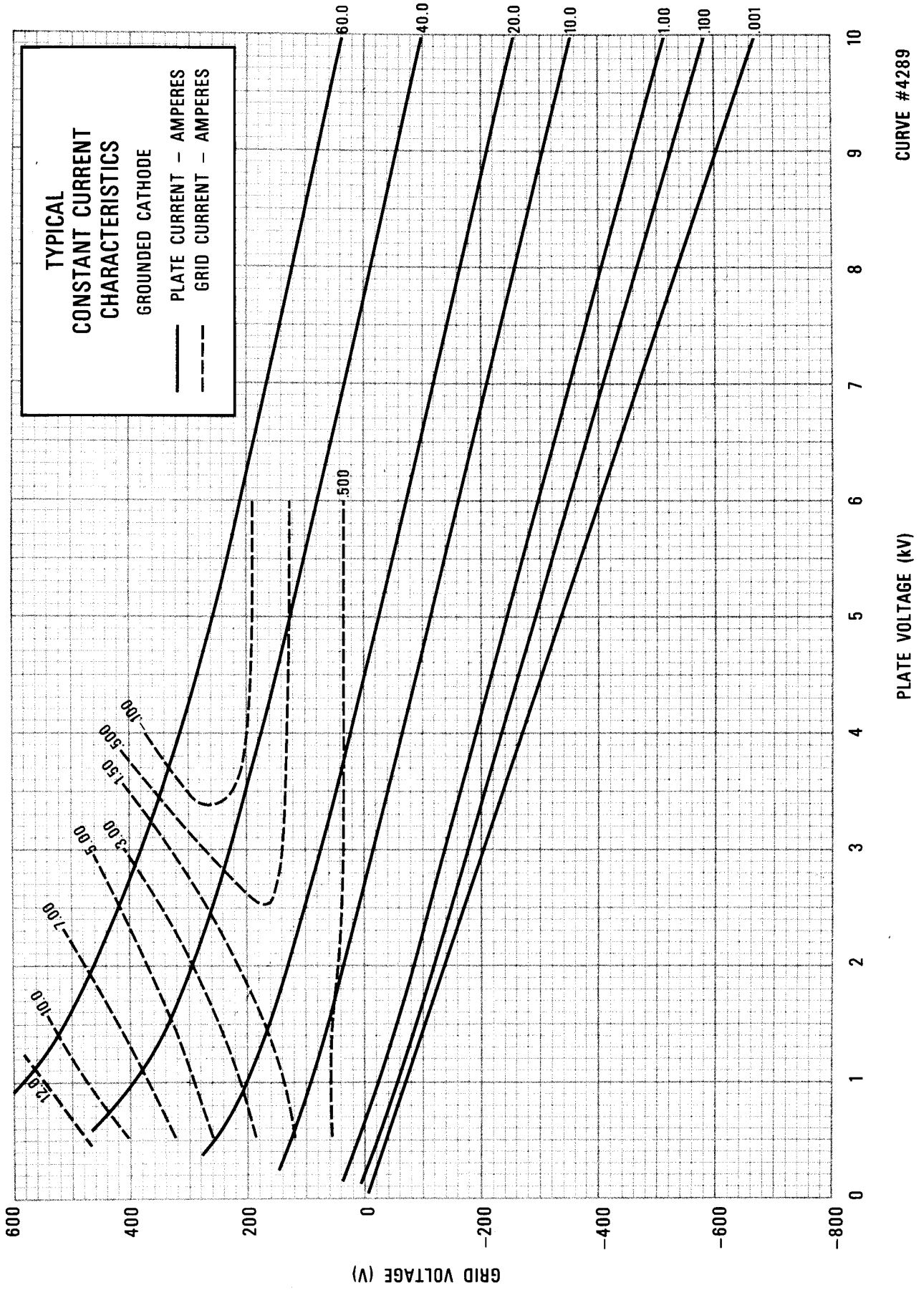
TYPICAL
CONSTANT CURRENT
CHARACTERISTICS
GROUNDED CATHODE
PLATE CURRENT – AMPERES
GRID CURRENT – AMPERES
60.0
40.0
20.0
10.0
1.00
.100
.001
.500
.100
.500
1.50
3.00
5.00
7.00
10.0
12.0
600
400
200
0
−200
−400
−600
−800
GRID VOLTAGE (V)
0
1
2
3
4
5
6
7
8
9
10
PLATE VOLTAGE (kV)
CURVE #4289