TECHNICAL DATA

3CX15,000H3

INDUSTRIAL MEDIUM-MU AIR-COOLED POWER TRIODE

The EIMAC 3CX15,000H3 is an air-cooled, ceramic-metal power triode designed primarily for use in industrial radio-frequency heating services. Its air- cooled anode is rated at 15 kilowatts of plate dissipation.

Full ratings apply up to 90 megacycles. Plentiful reserve emission is available from its one kilowatt filament. The grid structure is rated at 500 watts making this tube an excellent choice for severe application.

GENERAL CHARACTERISTICS

ELECTRICAL

Filament: Thoriated-Tungsten	*Min.*	*Nom.*	*Max.*	
Voltage		6.3		Volts
Current	152		172	amps
Amplification Factor		20		
Interelectrode Capacitances, Grounded Cathode Connection:				
Grid-Filament	50		60	$\mu\mu f$
Plate-Filament	1.3		1.6	$\mu\mu f$
Grid-Plate	30		38	$\mu\mu f$
Frequency for Maximum Ratings			90	MHz

MECHANICAL

Base	See Outline
Operating Position	Vertical, base up or down
Cooling	Forced Air
Maximum Operating Temperatures	250°C
Maximum Dimensions:	
Height	See Outline
Diameter	See Outline
Net Weight	13 Pounds

THESE SPECIFICATIONS ARE BASED ON DATA APPLICABLE AT PRINTING DATE. SINCE EIMAC HAS A POLICY OF CONTINUING PRODUCT IMPROVEMENT, SPECIFICATIONS ARE SUBJECT TO CHANGE WITHOUT NOTICE.

(Effective 4-1-66) © 1966 Varian

Printed in U.S.A.

RF INDUSTRIAL OSCILLATOR
Class-C (Filtered DC Power Supply)

MAXIMUM RATINGS:

DC PLATE VOLTAGE	12,000 Volts
DC PLATE CURRENT	6.0 Amps
DC GRID VOLTAGE	—1000 Volts
DC GRID CURRENT	1.0 Amps
PLATE INPUT POWER	60 kW
PLATE DISSIPATION	15 kW

TYPICAL OPERATION*

DC Plate Voltage	7000	10,000 Volts
DC Plate Current	6.0	5.0 Amps
DC Grid Voltage	—600	—800 Volts
DC Grid Current	660	542 mA
Peak Positive Grid Voltage	440	400 Volts
Driving Power	660	650 Watts
Plate Input Power	42	50 kW
Plate Dissipation	12	8.8 kW
Plate Output Power	30	41.2 kW
Approximate Load Impedance	600	1025 Ohms

*Loaded Conditions

Note: "TYPICAL OPERATION" data are obtained by calculation from published characteristic curves. No allowance for circuit losses has been made.

APPLICATION

ELECTRICAL

Filament

For the 3CX15,000H3 the rated filament voltage is 6.3 volts. Filament voltage, as measured at the socket, should be maintained at 6.3 volts plus or minus five percent for long tube life and consistent performance. Maximum life will be obtained by operation at minus 5 percent.

Control Grid Operation

The grid current rating is one ampere dc. This value should not be exceeded for more than very short periods such as during tuning. Over-current protection in the grid circuit should be provided. Ordinarily it will not be necessary to operate with more than 0.4 to 0.6 amperes grid current to obtain reasonable efficiency. In industrial heating service with varying loads, grid current should be monitored continuously with a dc current meter. The maximum grid dissipation rating is 500 watts.

Plate Operation

Maximum plate voltage rating of 12,000 volts and maximum plate current of 6.0 amps should not be applied simultaneously as rated plate dissipation may be exceeded.

Plate over-current protection should be provided to remove plate voltage quickly in the event of an over-load or an arc-over at the load. In addition current limiting power supply resistors should be used. These precautions are especially important in industrial service with its wide variations in loading.

Spark gaps from plate to ground should be used to prevent transient voltages from flashing across the tube envelope during any fault conditions.

MECHANICAL

Mounting

The 3CX15,000H3 must be mounted vertically, either base up or down. A grid contact flange is provided for bolting to a strap or a grid deck. Heavy flexible leads are provided for applying the filament voltage.

Cooling

The maximum temperature rating for the 3CX15,000H3 is 250°C. Sufficient forced-air circulation must be provided to keep the temperature of the anode at the base of the cooling fins and the temperature of the ceramic-metal seals below 250°C. Air-flow requirements to maintain seal temperature at 225°C in 50°C ambient air are tabulated below (for operation below 30 megacycles.)

MINIMUM AIR FLOW REQUIREMENTS
(Anode-to-Base Air Flow)

	Sea Level		5000 Feet	
Plate* Dissipation watts	Air Flow CFM	Pressure Drop inches water	Air Flow CFM	Pressure Drop inches water
7500	361	1.63	433	1.96
10,000	606	3.26	728	3.92
15,000	1260	10.00	1510	12.00

*Since the power dissipated by the filament represents about 1100 watts and since grid dissipation can, under some conditions represent another 500 watts, allowance has been made in preparing this tabulation for an additional 1600 watts.

Additional stem cooling air must be provided. 16 CFM of air directed against the center filament contact ring ½" below the outer filament contact ring by a 1½" I.D. air duct arranged at a 45° angle with the center line of the tube will provide adequate cooling for maximum frequency of 30 MHz, 50°C ambient, and 5000 ft. altitude.

Special Application

If it is desired to operate this tube under conditions widely different from those given here, write to Power Grid Product Manager, EIMAC, Division of Varian, 301 Industrial Way, San Carlos, California 94070, for information and recommendations.

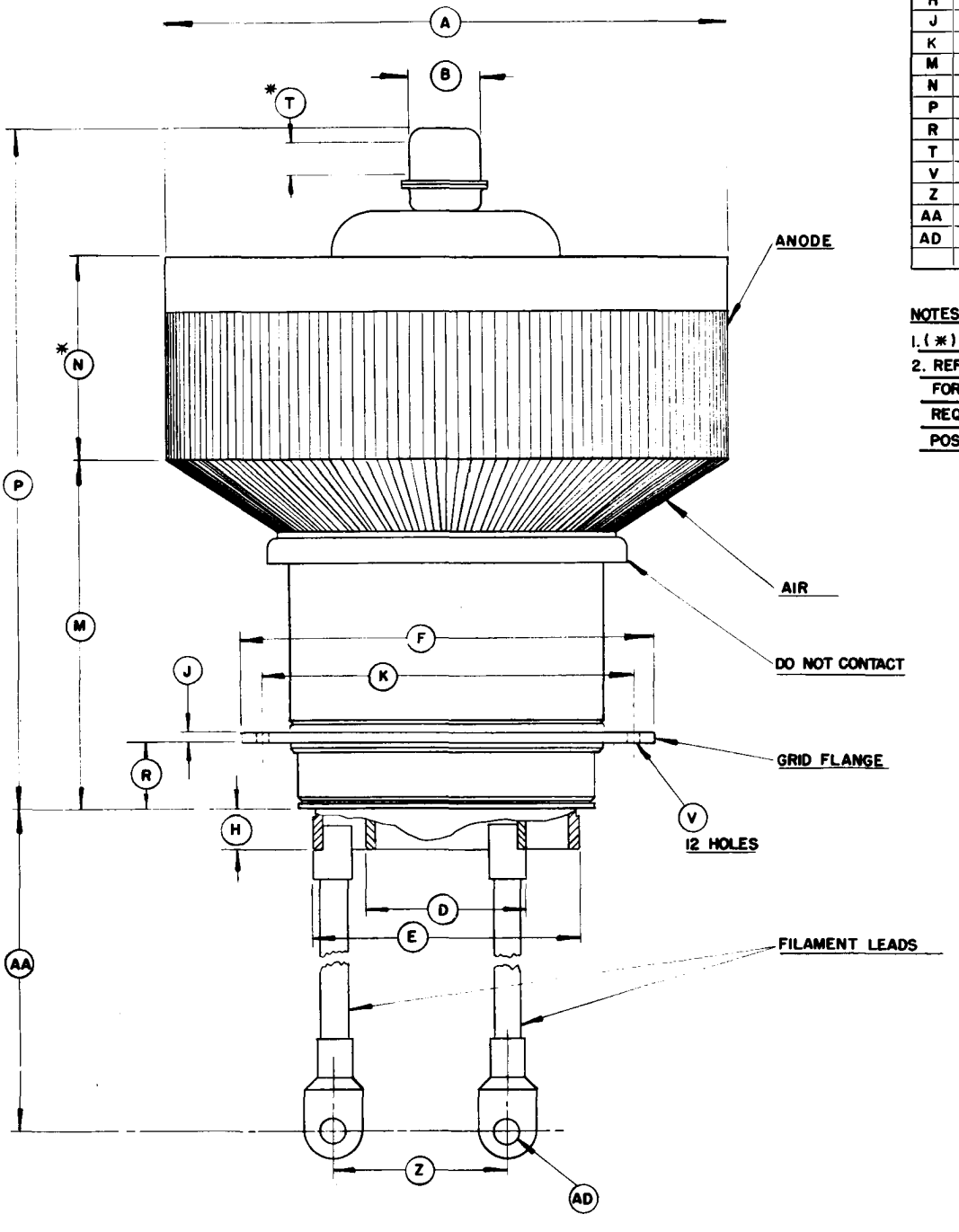

DIMENSIONS IN INCHES			
DIMENSIONAL DATA			
DIM.	MIN.	MAX.	REF.
A	6.928	7.050	
B	.855	.895	
D			1.875
E	3.230	3.270	3.250
F	5.030	5.090	
H	.530	.700	
J			.125
K	4.425	4.445	
M	3.950	4.300	
N	2.412	2.788	
P	8.250	8.750	
R	.700	.860	
T	.375		
V			.250
Z			2.000
AA	8.500	9.000	
AD			.390

NOTES:

1. (*) CONTACT SURFACE
2. REFERENCE DIMENSIONS ARE FOR INFO. ONLY & ARE NOT REQ'D FOR INSPECTION PURPOSES.

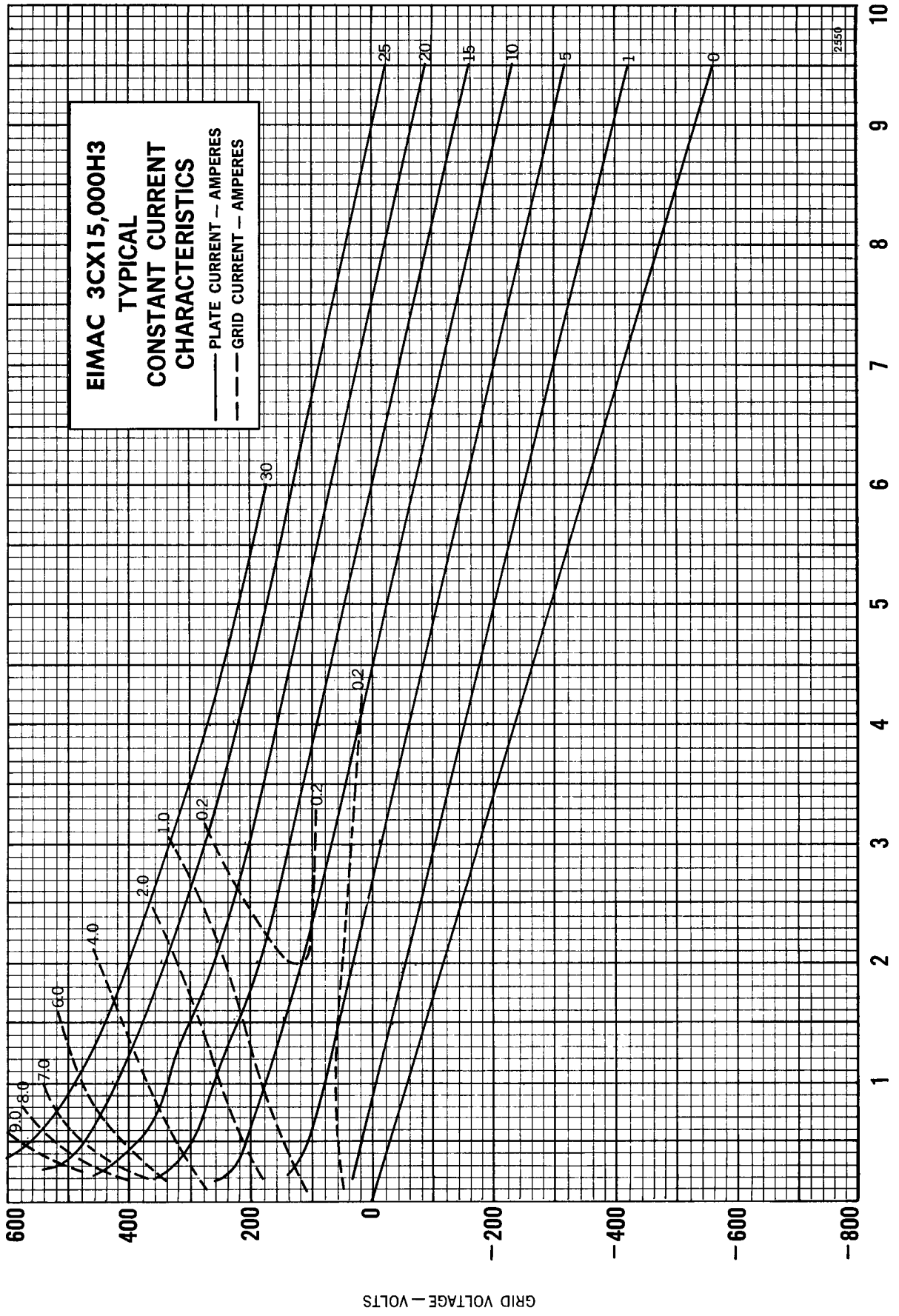
EIMAC 3CX15,000H3
TYPICAL
CONSTANT CURRENT
CHARACTERISTICS
PLATE CURRENT — AMPERES
GRID CURRENT — AMPERES
30
25
20
15
10
5
1
0
0.2
0.2
1.0
2.0
4.0
6.0
7.0
8.0
9.0
2550
600
400
200
0
−200
−400
−600
−800
1
2
3
4
5
6
7
8
9
10
GRID VOLTAGE — VOLTS
PLATE VOLTAGE — KILOVOLTS