3CX15,000A7

TECHNICAL DATA

HIGH-MU
POWER TRIODE

The EIMAC 3CX15,000A7 is a ceramic/metal power triode intended for use as a zero-bias Class B rf amplifier or Class C power amplifier or oscillator. Class B operation with zero grid bias offers circuit simplicity by eliminating the bias supply. In addition, grounded-grid operation is attractive since a power gain as high as twenty times can be obtained with the 3CX15,000A7.

GENERAL CHARACTERISTICS[1]

ELECTRICAL

Filament: Thoriated Tungsten	
Voltage	6.3 ± 0.3 V
Current, at 6.3 volts	160 A
Amplification Factor (Average):	200
Direct Interelectrode Capacitance (grounded cathode)[2]	
Cin	56 pF
Cout	0.2 pF
Cgp	36 pF
Direct Interelectrode Capacitance (grounded grid)[2]	
Cin	56 pF
Cout	36 pF
Cpk	0.2 pF
Frequency of Maximum Rating:	
CW	110 MHz

1. Characteristics and operating values are based upon performance tests. These figures may change without notice as the result of additional data or product refinement. EIMAC Division of Varian should be consulted before using this information for final equipment design.

2. Capacitance values are for a cold tube as measured in a special shielded fixture in accordance with Electronic Industries Association Standard RS-191.

MECHANICAL

Maximum Overall Dimensions:	
Length	8.75 in; 222.3 mm
Diameter	7.05 in; 179.1 mm
Net Weight	12 lb; 5.5 kg
Operating Position	Vertical base up or down
Maximum Operating Temperature:	
Ceramic/Metal Seals	250°C
Anode Core	250°C

(Effective 4-15-71) © by Varian

Printed in U.S.A.

Cooling	Forced air
Base	Coaxial
Recommended Air System Socket	SK-1300 or SK-1320
Recommended Air Chimney	SK-1306

RADIO FREQUENCY LINEAR AMPLIFIER CATHODE DRIVEN

Class AB

ABSOLUTE MAXIMUM RATINGS

DC PLATE VOLTAGE	8000	VOLTS
DC PLATE CURRENT	6.0	AMPERES
PLATE DISSIPATION	15,000	WATTS
GRID DISSIPATION	500	WATTS

1. Approximate values.

TYPICAL OPERATION (Frequencies to 110 MHz)
Class AB_2

Plate Voltage	7000	7000	Vdc
Grid Voltage	0	0	Vdc
Zero-Signal Plate Current[1]	.6	.6	Adc
Single-Tone Plate Current[2]	5.92	5.0	Adc
Single-Tone Grid Current[1]	1.22	1.0	Adc
Driving Power[1]	1750	1540	W
Plate Dissipation	13.4	10.8	kW
Single-Tone Plate Output Power	29.6	24.2	kW
Resonant Load Impedance	693	745	Ω
Drive Impedance	27	32	Ω

2. Adjust to obtain specified value.

RADIO FREQUENCY POWER AMPLIFIER OR OSCILLATOR

Class C Telegraphy or FM Telephony
Grid Driven

ABSOLUTE MAXIMUM RATINGS

DC PLATE VOLTAGE	8000	VOLTS
DC GRID VOLTAGE	-500	VOLTS
DC PLATE CURRENT	5.0	AMPERES
PLATE DISSIPATION	15,000	WATTS
GRID DISSIPATION	500	WATTS

TYPICAL OPERATION (Frequencies to 110 MHz)

Plate Voltage	7000	Vdc
Grid Voltage	-230	Vdc
Plate Current	4.0	Adc
Grid Current[1]	775	mAdc
Peak rf Grid Voltage[1]	555	v
Calculated Driving Power[1]	430	W
Plate Input Power	28	kW
Plate Dissipation	6.7	kW
Plate Output Power	21.3	kW
Resonant Load Impedance	963	Ω

1. Approximate value.

NOTE: TYPICAL OPERATION data are obtained by measurement or calculation from published characteristic curves. Adjustment of the rf grid voltage to obtain the specified plate current at the specified bias, and plate voltages is assumed. If this procedure is followed, there will be little variation in output power when the tube is changed, even though there may be some variation in grid current. The grid current which results when the desired plate current is obtained is incidental and varies from tube to tube. These current variations cause no difficulty so long as the circuit maintains the correct voltage in the presence of the variations in current. If grid bias is obtained principally by means of a grid resistor, the resistor must be adjustable to obtain the required bias voltage when the correct rf grid voltage is applied.

RANGE VALUES FOR EQUIPMENT DESIGN

	Min.	Max.	
Heater: Current at 6.3 volts	152	168	A
Cathode Warmup Time	5.0	---	sec.
Interelectrode Capacitances (grounded grid)[1]			
Cin	50.0	62.0	pF
Cout	32.0	40.0	pF
Cpk	---	0.3	pF
Interelectrode Capacitances (grounded cathode)[1]			
Cin	50.0	62.0	pF
Cout	---	0.3	pF
Cgp	32.0	40.0	pF

1. Capacitance values are for a cold tube as measured in a shielded fixture in accordance with Electronic Industries Association Standard RS-191.

APPLICATION

MOUNTING & SOCKETING - The 3CX15,000A7 must be operated vertically, base up or down, and should be protected from severe shock and vibration. The use of an EIMAC air-system socket is recommended. For grid-driven applications, the SK-1300 is used; for cathode-driven circuits, the SK-1320 should be used, as the grid is grounded to the socket frame in this unit. The SK-1306 air chimney is designed to fit around the tube's anode cooler and mount with either socket.

COOLING - The maximum temperature rating for the external surfaces of the 3CX15,000A7 is 250°C. Sufficient forced-air cooling must be provided to maintain the temperature of the anode core and the ceramic/metal seals below 250°C. Tube life is usually prolonged if these areas are maintained at temperatures below the maximum rating. Minimum air flow requirements (for air flowing in a base-to-anode direction) to maintain anode core and seal temperatures below 225°C with an inlet-air temperature of 50°C are tabulated below. The use of these air-flow rates through the recommended socket/chimney combination will provide effective cooling of the tube. Air flow should be applied before or simultaneously with the application of electrode voltages (including the filament) and should normally be maintained for a short period of time after all voltages are removed to allow for tube cool-down.

	SEA LEVEL		10,000 FEET	
Anode Diss. (watts) *	Air Flow (cfm)	Approx.Press. drop (In.H_2O)	Air Flow (cfm)	Approx.Press. drop(In.H_2O)
5,000	242	0.8	350	1.3
7,500	325	1.7	470	2.4
10,000	475	2.8	690	4.1
12,500	640	4.3	930	6.3
15,000	840	6.2	1220	9.7

* Since the power dissipated by the filament is about 1000 watts, and since the grid dissipation can represent another 500 watts, allowance has been made in preparing this tabulation for an additional 1500 watts of dissipation.

FILAMENT OPERATION - The rated filament voltage for the 3CX15,000A7 is 6.3 volts. Filament voltage, as measured at the socket, should be maintained at this value to obtain maximum tube life. In no case should it be allowed to deviate from the rated value by more than plus or minus five percent.

INPUT CIRCUIT - When the 3CX15,000A7 is operated as a ground-grid rf amplifier, the use of a resonant tank in the cathode circuit is recommended in order to obtain greatest linearity and power output. For best results with a single-ended amplifier, it is suggested that the cathode tank circuit operate at a "Q" of two or more.

CLASS-C OPERATION - Although specifically designed for Class-B service, the 3CX15,000A7 may be operated as a Class-C power amplifier or oscillator. The zero-bias characteristic of the 3CX15,000A7 can be used to advantage in Class-C amplifiers by employing only grid-leak bias. If driving power fails, plate dissipation is then kept to a low value because the tube will be operating at the normal static zero-bias conditions.

INTERELECTRODE CAPACITANCE - The actual internal interelectrode capacitance of a tube is influenced by many variables in most applications, such as stray capacitance to the chassis, capacitance added by the socket used, stray capacitance between tube terminals, and wiring effects. To control the actual capacitance values within the tube, as the key component involved, the industry and the Military Services use a standard test procedure as described in Electronic Industries Association Standard RS-191. This requires the use of specially constructed test fixtures which effectively shield all external tube leads from each other and eliminates any capacitance reading to "ground". The test is performed on a cold tube. Other factors being equal, controlling internal tube capacitance in this way normally assures good interchangeability of tubes over a period of time, even when the tube may be made by different manufacturers. The capacitance values shown in the manufacturer's technical data, or test specifications, normally are taken in accordance with Standard RS-191.

The equipment designer is therefore cautioned to make allowance for the actual capacitance values which will exist in any normal application. Measurements should be taken with the socket and mounting which represent approximate final layout if capacitance values are highly significant in the design.

HIGH VOLTAGE - The 3CX15,000A7 operates at voltages which can be deadly, and the equipment must be designed properly and operating

precautions must be followed. Equipment must be designed so that no one can come in contact with high voltages. All equipment must include safety enclosures for high-voltage circuits and terminals, with interlock switches to open the primary circuits of the power supplies and to discharge high-voltage condensers whenever access doors are opened. Interlock switches must not be bypassed or "cheated" to allow operation with access doors open. Always remember that HIGH VOLTAGE CAN KILL.

SPECIAL APPLICATIONS - If it is desired to operate this tube under conditions widely different from those given here, write to Power Grid Tube Division, EIMAC Division of Varian, 301 Industrial Way, San Carlos, CA 94070, for information and recommendations.

DIMENSIONAL DATA						
DIM.	INCHES			MILLIMETERS		
	MIN.	MAX.	REF.	MIN.	MAX.	REF.
A	6.928	7.050	- -	175.97	179.07	- -
B	0.855	0.895	- -	21.72	22.73	- -
C	0.720	0.760	- -	18.29	19.30	- -
D	1.896	1.936	- -	48.16	49.17	- -
E	3.133	3.173	- -	79.58	80.59	- -
F	3.792	3.832	- -	96.32	98.86	- -
H	0.188	- -	- -	4.78	- -	- -
J	0.188	- -	- -	4.78	- -	- -
M	3.950	4.300	- -	100.33	109.22	- -
N	2.412	2.788	- -	61.26	70.82	- -
P	8.250	8.750	- -	209.55	222.25	- -
R	0.986	1.050	- -	25.04	26.67	- -
S	3.412	3.788	- -	86.66	96.22	- -
T	0.375	- -	- -	9.53	- -	- -

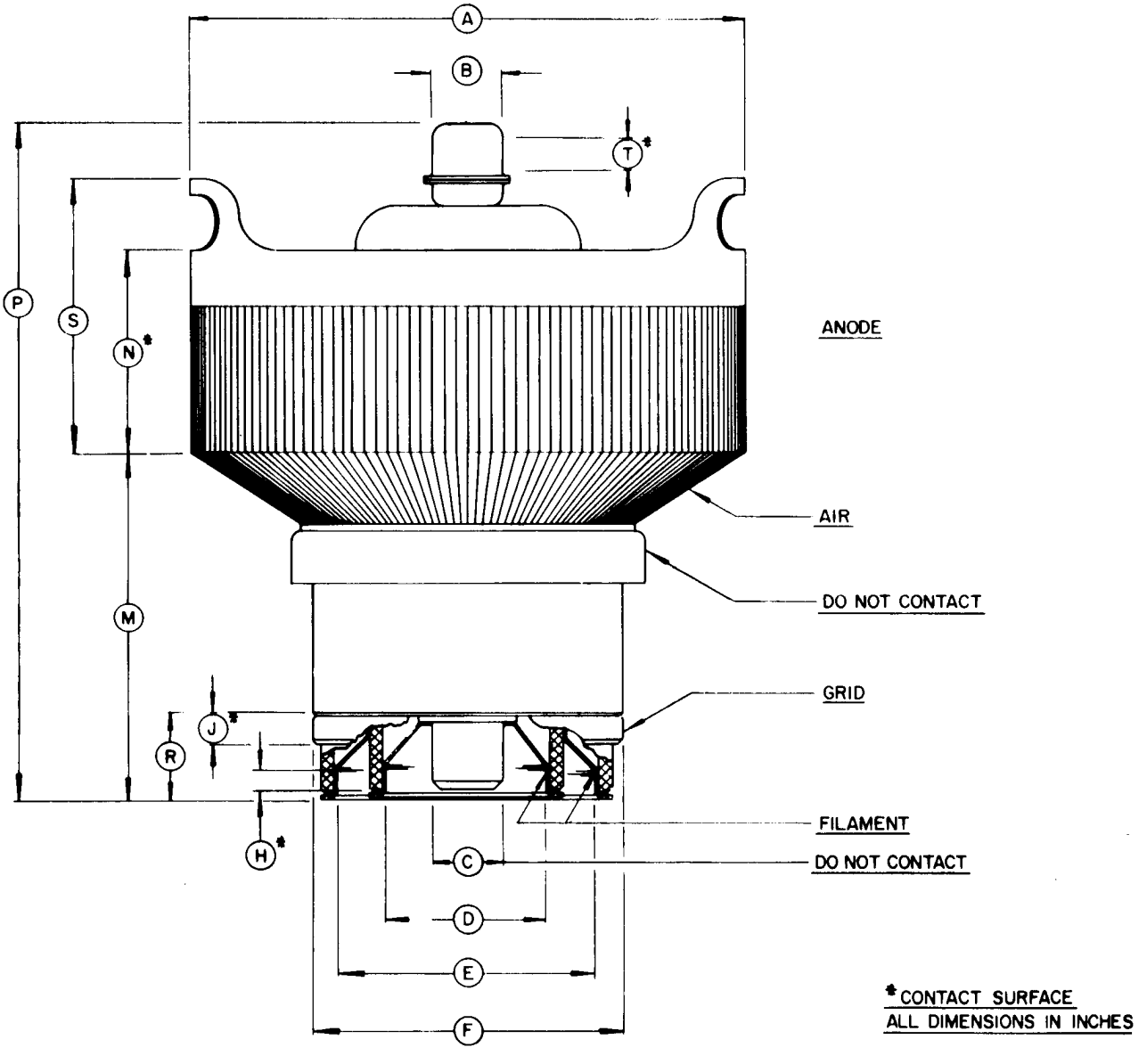

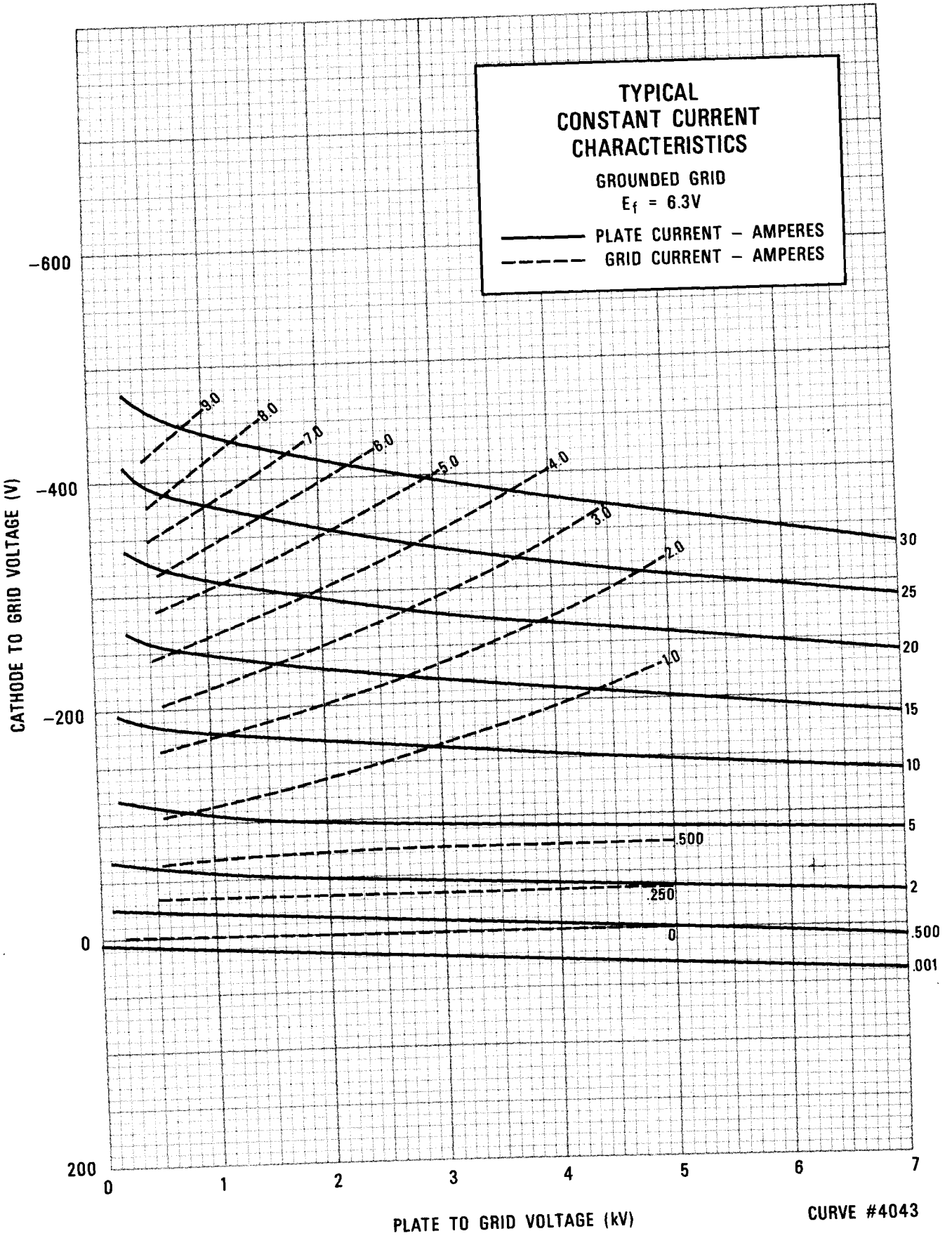
TYPICAL
CONSTANT CURRENT
CHARACTERISTICS
GROUNDED GRID
Ef = 6.3V
PLATE CURRENT – AMPERES
GRID CURRENT – AMPERES
CATHODE TO GRID VOLTAGE (V)
-600
-400
-200
0
200
PLATE TO GRID VOLTAGE (kV)
0
1
2
3
4
5
6
7
9.0
8.0
7.0
6.0
5.0
4.0
3.0
2.0
1.0
.500
.250
0
30
25
20
15
10
5
2
.500
.001
CURVE #4043