EIMAC
Division of Varian
SAN CARLOS
CALIFORNIA

3CW40,000H3

MEDIUM-MU

WATER-COOLED POWER TRIODE

The EIMAC 3CW40,000H3 is a water-cooled, ceramic-metal power triode designed primarily for use in industrial radio-frequency heating services. Its water-cooled anode is conservatively rated at 40 kilowatts of plate dissipation with low waterflow and pressure drop.

Input of 80 kilowatts is permissible up to 90 megahertz. Plentiful reserve emission is available from its 1500 watt filament. The grid structure is rated at 750 watts, making this tube an excellent choice for severe applications.

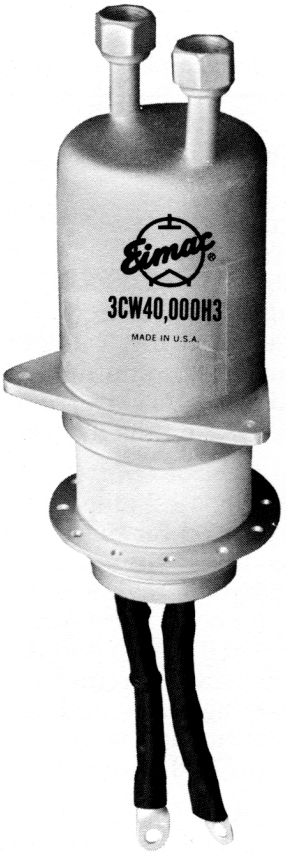

GENERAL CHARACTERISTICS

ELECTRICAL

	Min.	Nom.	Max.	
Filament: Thoriated-Tungsten				
Voltage		10		volts
Current	152		168	amps
Amplification Factor		20		
Interelectrode Capacitances, Grounded Cathode:				
Grid-Filament	65		75	pF
Plate-Filament	2.0		2.6	pF
Grid Plate	38		48	pF
Frequency for Maximum Ratings			90	MHz

MECHANICAL

Base	See Outline
Operating Position	Vertical, base up or down
Cooling	Water and Forced Air
Maximum Operating Temperatures:	
Ceramic-to-Metal Seals	250°C
Maximum Dimensions:	
Height	See Outline
Diameter	See Outline
Net Weight	14 pounds

(Effective 8-1-67) © 1967 Varian

Printed in U.S.A.

RF INDUSTRIAL OSCILLATOR

Class-C (Filtered DC Power Supply)

MAXIMUM RATINGS

DC PLATE VOLTAGE	12,000 VOLTS
DC PLATE CURRENT	9.0 AMPS
DC GRID VOLTAGE	-1200 VOLTS
DC GRID CURRENT	1.2 AMPS
PLATE INPUT POWER	100 KW
PLATE DISSIPATION	40 KW

TYPICAL OPERATION*

DC Plate Voltage	7000	10,000 volts
DC Plate Current	7.7	9.0 amps
DC Grid Voltage	-700	-850 volts
DC Grid Current	.53	.742 amps
Peak Positive Grid Voltage	440	550 volts
Driving Power	600	1040 watts
Plate Input Power	54	90 kW
Plate Dissipation	16	20 kW
Plate Output Power	37.7	70 kW
Approximate Load Impedance	408	526 ohms

*Loaded Conditions

Note: "TYPICAL OPERATION" data are obtained by calculation from published characteristic curves and confirmed by direct tests. No allowance for circuit losses, either input or output, has been made.

APPLICATION

ELECTRICAL

Filament — The rated filament voltage for the 3CW40,000H3 is 10.0 volts. Filament voltage, as measured at the tube, should be maintained at this value for consistent performance and maximum tube life. In no case should it be allowed to vary from 10.0 volts by more than plus or minus five percent.

Control Grid Operation — The grid current rating is 1.2 ampere dc. This value should not be exceeded for more than very short periods such as during tuning and over-current protection in the grid circuit should be provided. Ordinarily it will not be necessary to operate with more than 0.3 to 0.6 amp grid current to obtain reasonable efficiency. In industrial heating service with varying loads, grid current should be monitored continuously with a dc current meter. The maximum grid dissipation rating is 750 watts.

Plate Operation — Maximum plate voltage rating of 12,000 volts and maximum plate current of 9.0 amps should not be applied simultaneously as rated plate dissipation may be exceeded. The 100 kilowatts input rating applies for Class-C amplifier or oscillator service with no modulation.

Plate over-current protection should be provided to remove plate voltage quickly in the event of an over-load or an arc-over at the load. In addition current limiting power supply resistors should be used. These precautions are especially important in industrial service with its wide variations in loading.

Spark gaps from plate to ground should be used to prevent transient voltages from flashing across the tube envelope during any fault conditions.

High Frequency Operation — The 3CW40,000H3 is usable to 120 MHz. At this frequency, plate voltage must be reduced to 7000 volts in Class-C service.

MECHANICAL

Mounting — The 3CW40,000H3 must be mounted vertically, either base up or down.

Cooling — The anode of the 3CW40,000H3 is cooled by circulating water through the integral anode-water jacket. The table below lists minimum water-flow rates at various plate dissipation levels. The table is based on a water temperature rise of 15°C.

MINIMUM COOLING WATER-FLOW REQUIREMENTS

Plate Dissipation (kW)	Water Flow (gpm)	Pressure Drop (psi)
20	5.25	4.0
30	7.6	6.5
40	10.2	13.0
50	12.6	21.0

Since power dissipated by the filament represents 1500 watts and grid dissipation can reach 750 watts, 2250 watts has been added to anode dissipation in preparing this tabulation.

The cooling table assumes that the maximum outlet-water temperature will be below 70°C to preclude "spot" boiling.

Additional stem cooling air must be provided. 20 CFM of air directed against the center filament contact ring ½" below the outer filament contact ring by a 1½" I.D. air duct arranged at a 45° angle with the center line of the tube will provide adequate cooling for maximum frequency of 30 MHz, 50°C ambient, and 5000 ft. altitude.

Special Application — If it is desired to operate this tube under conditions widely different from those given here, write to Power Grid Product Manager, EIMAC Division of Varian, 301 Industrial Way, San Carlos, California 94070, for information and recommendations.

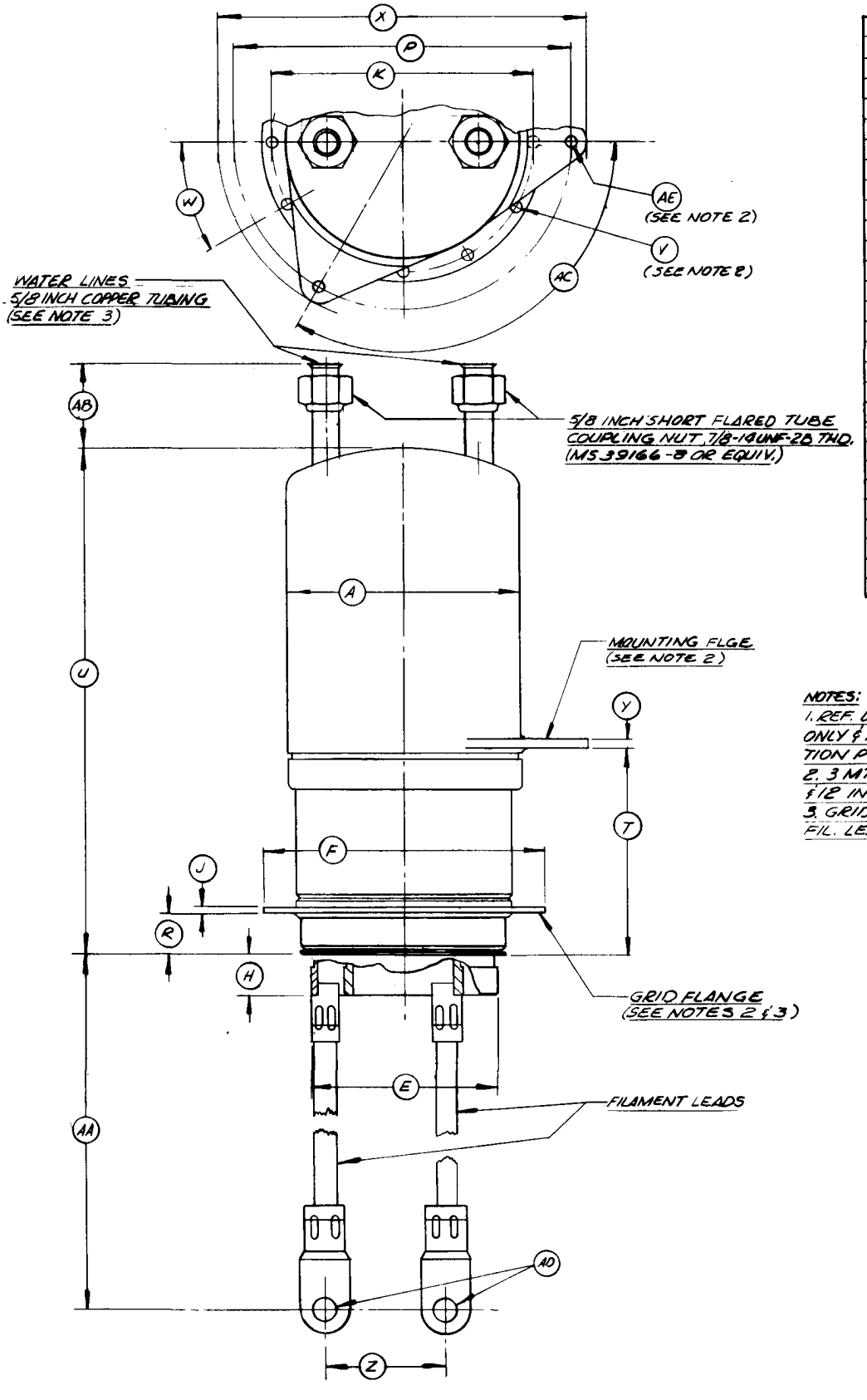

DIMENSIONS IN INCHES

DIMENSIONAL DATA			
DIM	MIN.	MAX.	REF
A	4.290	4.375	
E	3.230	3.270	
F	5.030	5.090	
H	.530	.700	
J			.328
K	4.425	4.475	
M			2.750
P	5.850	5.900	
R	.700	.860	
T	4.050	4.160	
U	9.800	10.050	
V			.250
W	29°	31°	
X			6.750
Y			.250
Z			2.000
AA	8.500	9.000	
AB			2.625
AC	118°	122°	
AD			.390
AE			.312

NOTES:
1. REF. DIMS. ARE FOR INFORMATION ONLY & ARE NOT REQ'D FOR INSPECTION PURPOSES.
2. 3 MTG. HOLES IN MTG. FLANGE & 12 IN THE GRID FLANGE
3. GRID FLGE, WATER FITTINGS & FIL. LEADS ORIENTED AS SHOWN.

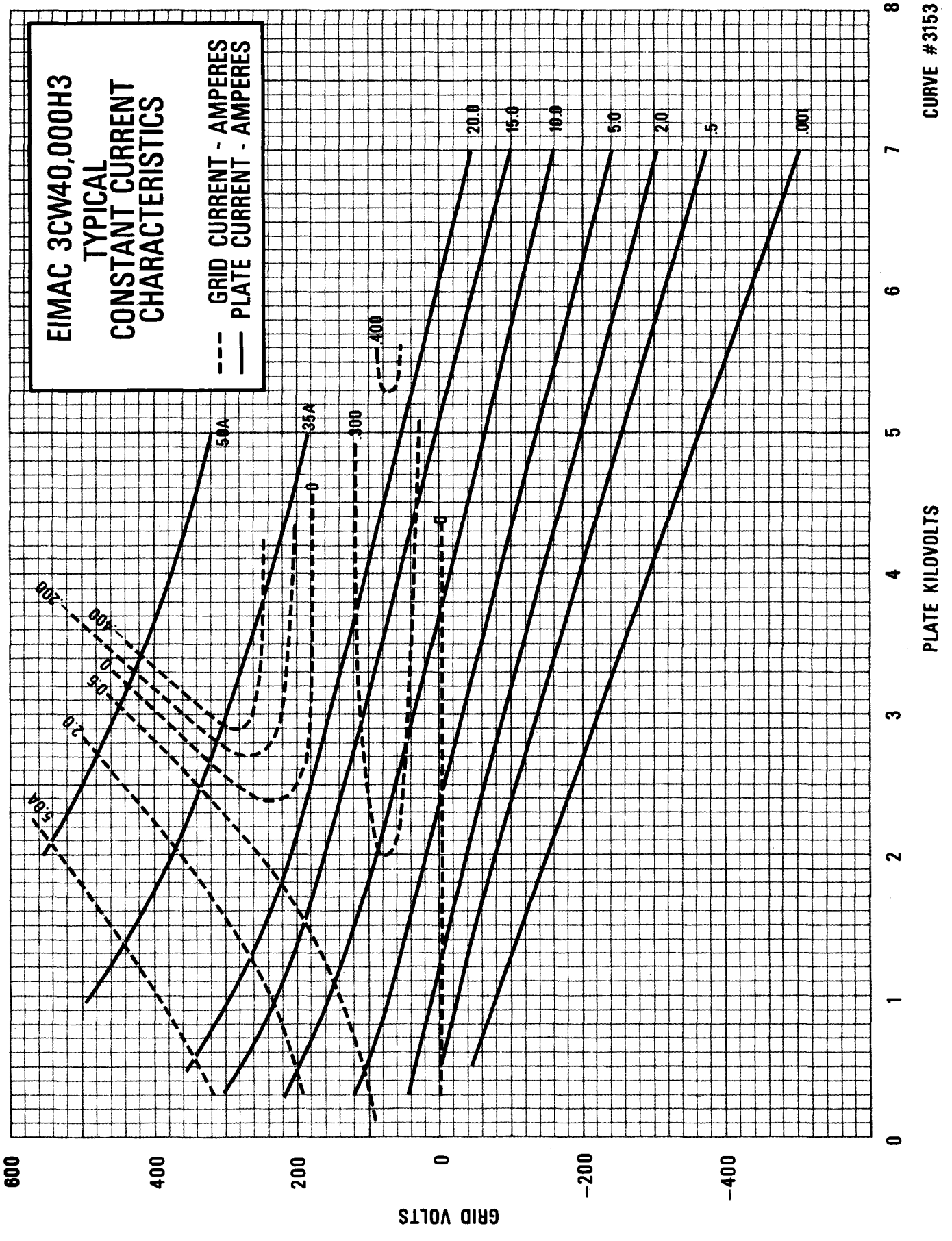
EIMAC 3CW40,000H3
TYPICAL
CONSTANT CURRENT
CHARACTERISTICS
GRID CURRENT - AMPERES
PLATE CURRENT - AMPERES
50A
35A
0
.300
.400
20.0
15.0
10.0
5.0
2.0
.5
.001
5.0A
2.0
0.5
0
.400
.200
GRID VOLTS
600
400
200
0
-200
-400
PLATE KILOVOLTS
0
1
2
3
4
5
6
7
8
CURVE #3153