3CW30,000H7

TECHNICAL DATA

HIGH-MU
WATER-COOLED
POWER TRIODE

The EIMAC 3CW30,000H7 is a ceramic/metal water-cooled high-mu power triode intended for use as a Class C power amplifier or for zero-bias Class B or AB linear amplifier service, and also intended for use as a dc voltage or current regulator, or in high-voltage switch tube or pulsed regulator service.

Internally the tube is identical to the 3CX15,000A7, and except for anode dissipation capability, all ratings are the same.

Class B amplifier operation with zero grid bias offers circuit simplicity by eliminating the bias supply. In addition, grounded grid operation is attractive since a power gain as high as twenty times can be obtained.

The anode power dissipation rating is 30,000 watts with water cooling. No socket is required for the tube because of the mounting flanges attached to the anode and grid and the flexible filament leads on the base.

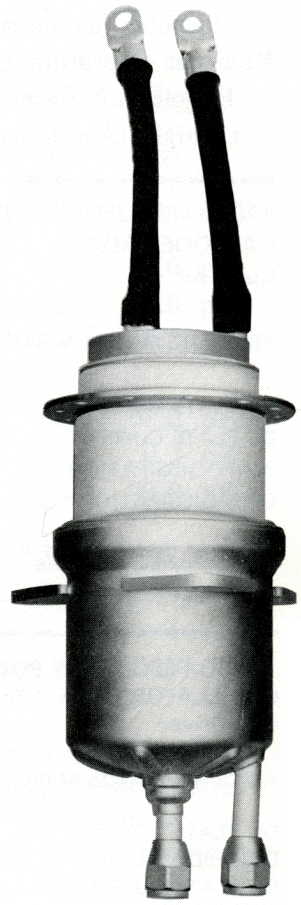

GENERAL CHARACTERISTICS[1]

ELECTRICAL

Filament: Thoriated Tungsten	
Voltage	6.3 ± 0.3 V
Current, at 6.3 volts	160 A
Amplification Factor (Average):	200
Direct Interelectrode Capacitance (grounded cathode)[2]	
Cin	61 pF
Cout	0.2 pF
Cgp	36 pF
Direct Interelectrode Capacitance (grounded grid)[2]	
Cin	61 pF
Cout	36 pF
Cpk	0.2 pF
Frequency of Maximum Rating:	
CW	110 MHz

1. Characteristics and operating values are based upon performance tests. These figures may change without notice as the result of additional data or product refinement. EIMAC Division of Varian should be consulted before using this information for final equipment design.

2. Capacitance values are for a cold tube as measured in a special shielded fixture in accordance with Electronic Industries Association Standard RS-191.

(Effective 2-1-75) © by Varian Printed In U.S.A.

MECHANICAL

Base . . . . . Special, with grid contact flange & filament flying leads
Operating Position . . . . . Vertical, Anode up or down
Cooling . . . . . Water or equivalent liquid & forced air
Maximum Overall Dimensions:
Length (including filament leads) . . . . . 20.5 in; 52.1 cm
Diameter (anode mounting flange pitch circle) . . . . . 6.75 in; 17.1 cm
Maximum Operating Temperature:
Envelope & Ceramic/Metal Seals . . . . . 250°C
Net Weight (Approximate) . . . . . 10.6 lbs; 4.8 kg

RADIO FREQUENCY LINEAR AMPLIFIER CATHODE DRIVEN

Class AB

ABSOLUTE MAXIMUM RATINGS:

DC PLATE VOLTAGE	8000	VOLTS
DC PLATE CURRENT	6.0	AMPERES
PLATE DISSIPATION	30,000	WATTS
GRID DISSIPATION	500	WATTS

1. Approximate values
2. Adjust to obtain specified value.

TYPICAL OPERATION (Frequencies to 30 MHz)
Class AB_2

Plate Voltage	7000	7000	Vdc
Grid Voltage	0	0	Vdc
Zero-Signal Plate Current [1]	.6	.6	Adc
Single-Tone Plate Current [2]	5.92	5.0	Adc
Single-Tone Grid Current [1]	1.22	1.0	Adc
Driving Power [1]	1750	1540	W
Plate Dissipation	13.4	10.8	kW
Single-Tone Plate Output Power	29.6	24.2	kW
Resonant Load Impedance	693	745	Ω
Drive Impedance	27	32	Ω

RADIO FREQUENCY POWER AMPLIFIER OR OSCILLATOR Class C Telegraphy or FM

Grid Driven

ABSOLUTE MAXIMUM RATINGS

DC PLATE VOLTAGE	8000	VOLTS
DC GRID VOLTAGE	-500	VOLTS
DC PLATE CURRENT	5.0	AMPERES
PLATE DISSIPATION	30,000	WATTS
GRID DISSIPATION	500	WATTS

1. Approximate value.

TYPICAL OPERATION (Frequencies to 30 MHz)

Plate Voltage	7000	Vdc
Grid Voltage	-230	Vdc
Plate Current	4.0	Adc
Grid Current [1]	775	mAdc
Peak rf Grid Voltage [1]	555	v
Calculated Driving Power [1]	430	W
Plate Input Power	28	kW
Plate Dissipation	6.7	kW
Plate Output Power	21.3	kW
Resonant Load Impedance	963	Ω

DC VOLTAGE OR CURRENT REGULATOR SWITCH TUBE OR PULSED REGULATOR

ABSOLUTE MAXIMUM RATINGS:

DC PLATE VOLTAGE	28	KILOVOLTS
DC GRID VOLTAGE	-500	VOLTS
DC PLATE CURRENT [1]	6	AMPERES
PULSE PLATE CURRENT	40	AMPERES
DUTY, PULSE SERVICE [2]	0.1	
PLATE DISSIPATION [2]	30	KILOWATTS
GRID DISSIPATION [2]	500	WATTS

1. Steady-state value in voltage or current regulator service.
2. With duty in excess of approximately 0.1 excessive element heating may occur during the pulse and consequent element dissipation derating may be required.

NOTE: TYPICAL OPERATION data are obtained by measurement or calculation from published characteristic curves. Adjustment of the rf grid voltage to obtain the specified plate current at the specified bias, and plate voltages is assumed. If this procedure is followed, there will be little variation in output power when the tube is changed, even though there may be some variation in grid current. The grid current which results when the desired plate current is obtained is incidental and varies from tube to tube. These current variations cause no difficulty so long as the circuit maintains the correct voltage in the presence of the variations in current. If grid bias is obtained principally by means of a grid resistor, the resistor must be adjustable to obtain the required bias voltage when the correct rf grid voltage is applied.

RANGE VALUES FOR EQUIPMENT DESIGN

	Min.	Max.	
Heater: Current at 6.3 volts	152	168	A
Cathode Warmup Time	5.0	---	sec.
Interelectrode Capacitances (grounded grid) [1]			
Cin	55.0	67.0	pF
Cout	32.0	40.0	pF
Cpk	---	0.3	pF
Interelectrode Capacitances (grounded cathode) [1]			
Cin	55.0	67.0	pF
Cout	---	0.3	pF
Cgp	32.0	40.0	pF

1. Capacitances values are for a cold tube as measured in a shielded fixture in accordance with Electronic Industries Association Standard RS-191.

APPLICATION

MECHANICAL

MOUNTING - The 3CW30,000H7 must be operated vertically, anode down or up, and should be protected from shock and vibration. The anode mounting flange provides a convenient mounting means, and the grid is also provided with a flange for mating with a simple contact assembly. Both filament connections are made with flying leads approximately nine inches long with heavy lugs attached at the ends.

COOLING - The anode of the 3CW30,000H7 is cooled by circulating water through the integral anode water jacket. The cooling table shows minimum water-flow rates at various plate dissipation levels and assumes an inlet water temperature of 50°C with the anode mounted either up or down. Care should be taken to use the correct cooling water connector for inlet water, which is dependent on the tube orientation (base up or down), and these are shown on the tube outline drawing.

Where a liquid coolant other than water is used, the difference in cooling characteristics should be carefully considered and taken into account. Maximum system pressure must not exceed 50 psi.

Minimum Cooling Water-Flow Requirements		
Plate Dissipation (kW)	Water Flow (gpm)	Pressure Drop Approx. psi.
15	12	13.5
20	13	15.0
30	14	17.0

A major factor effecting long life of water-cooled tubes is the condition of the cooling water. If the cooling water is ionized, deposits of copper oxide will form on the internal parts of the water jacket and can cause localized heating of the anode and eventual failure of the tube.

A simple method of determining the condition of the water is to measure the resistance across a known volume. The resistance of the water should be maintained above 50 KΩ/cm , and preferably above 250 KΩ/cm . A relative water resistance check can be made continuously by measuring the leakage current which will bypass a short section of insulating hose column if metal nipples or fittings are used as electrodes.

Forced-air cooling of the base is also required, with a minimum of 50 cfm of air at 50°C maximum directed up into and around the base of the tube to cool the grid and filament contact areas.

Both anode and base cooling should be applied before or simultaneously with electrode voltages, including the filament, and should normally be maintained for a short period of time after all voltages are removed to allow for tube cooldown.

ELECTRICAL

FILAMENT OPERATION - Filament voltage should be measured at the terminals with a 1 percent rms responding meter. The peak emission at rated filament voltage of the EIMAC 3CW30,000H7 is normally many times the peak emission required for communication service. A small decrease in filament temperature due to reduction of filament voltage can increase the life of the 3CW30,000H7 by a substantial percentage. It is good practice to determine the nominal filament voltage for a particular application that will not adversely affect equipment operation. This is done by measuring some important parameter of performance such as plate current, power output, or an increase in distortion. Operation must be at a filament voltage slightly higher than the point at which performance appears to deteriorate. For pulsed regulator or switch tube service full nominal filament voltage is recommended.

INPUT CIRCUIT - When the 3CW30,000H7 is operated as a grounded-grid rf amplifier, the use of a resonant tank in the cathode circuit is recommended in order to obtain greatest linearity and power output. For best results with a single-ended amplifier, it is suggested that the cathode tank circuit operate at a "Q" of 5 or more.

CLASS-C OPERATION - Although designed specifically for Class-B service, the 3CW30,000H7 may be operated as a Class-C amplifier or oscillator or as a plate-modulated radio-frequency amplifier. The zero-bias characteristic can be used to advantage in Class-C amplifiers by employing only grid leak bias. If driving power should fail, plate dissipation is then kept to a low value because the tube will be operating at normal, static, zero-bias conditions.

STANDBY OPERATION - Coolant must be circulated through the anode water jacket whenever filament power is applied even though no other voltages are present. Sixty to eighty percent of the filament power appears as heat in the anode. In the absence of coolant flow, temperatures will rise to levels which are detrimental to long life. If the coolant lines are obstructed the coolant jacket may rupture from the generated steam pressure.

HIGH VOLTAGE - Normal operating voltages used with this tube are deadly, and the equipment must be designed properly and operating precautions must be followed. Design all equipment so that no one can come in contact with high voltages. All equipment must include safety enclosures for high-voltage circuits and terminals, with interlock switches to open primary circuits of the power supply and to discharge high-voltage condensers whenever access doors are opened. Interlock switches must not be bypassed or "cheated" to allow operation with access doors open. Always remember that HIGH VOLTAGE CAN KILL.

X-RADIATION - High-vacuum tubes operating at voltages higher than 10 kilovolts produce progressively more dangerous X-ray radiation as the voltage is increased. This tube, operating at its rated voltages and currents, is a potential X-ray hazard. Only limited shielding is afforded by the tube envelope. Moreover, the X-ray radiation level can increase significantly with aging and gradual deterioration, due to leakage paths or emission characteristics as they are effected by the high voltage. X-ray shielding must be provided on all sides of tubes operating at these

voltages to provide adequate protection throughout the tube's life. Periodic checks on the X-ray level should be made, and the tube should never be operated without adequate shielding in place when voltages above 10 kilovolts are in use. Lead glass, which attenuates X-rays, is available for viewing windows. If there is any doubt as to the requirement for or the adequacy of shielding, an expert in this field should be contacted to perform an X-ray survey of the equipment.

Operation of high-voltage equipment with interlock switches "cheated" and cabinet doors open in order to be better able to locate an equipment malfunction can result in serious X-ray exposure.

INTERELECTRODE CAPACITANCE - The actual internal interelectrode capacitance of a tube is influenced by many variables in most applications, such as stray capacitance to the chassis, capacitance added by the socket used, stray capacitance between tube terminals, and wiring effects. To control the actual capacitance values within the tube, as the key component involved, the industry and the Military Services use a standard test procedure as described in Electronic Industries Association Standard RS-191. This requires the use of specially constructed test fixtures which effectively shield all external tube leads from each other and eliminates any capacitance reading to "ground". The test is performed on a cold tube. Other factors being equal, controlling internal tube capacitance in this way normally assures good interchangeability of tubes over a period of time, even when the tube may be made by different manufacturers. The capacitance values shown in the manufacturer's technical data, or test specifications, normally are taken in accordance with Standard RS-191.

The equipment designer is therefore cautioned to make allowance for the actual capacitance values which will exist in any normal application. Measurements should be taken with the socket and mounting which represent approximate final layout if capacitance values are highly significant in the design.

RADIO FREQUENCY RADIATION - Avoid exposure to strong rf fields even at relatively low frequency. Absorption of rf energy by human tissue is dependent on frequency. Under 30 MHz, most of the energy will pass completely through the human body with little attenuation or heating effect. Public health agencies are concerned with the hazard, however, even at these frequencies, and it is worth noting that some commercial dielectric heating units actually operate at frequencies as low as the 13 and 27 MHz bands.

Many EIMAC power tubes, such as the 3CW-30,000H7, are specifically designed to generate or amplify radio frequency power. There may be a relatively strong rf field in the general proximity of the power tube and its associated circuitry--- the more power involved, the stronger the rf field. Proper enclosure design and efficient coupling of rf energy to the load will minimize the rf field in the vicinity of the power amplifier unit itself.

FAULT PROTECTION - In addition to normal plate over-current interlock, screen current interlock, and coolant flow interlock, it is good practice to protect the tube from internal damage which could result from occasional plate arcing at high anode voltage.

In all cases some protective resistance, 5 ohms to 25 ohms, should be used in series with each tube anode to absorb power supply stored energy in case a plate arc should occur. If power supply stored energy exceeds 750 watt seconds, we strongly recommend use of some form of electronic crowbar which will discharge power supply capacitors in a few microseconds following indication of start of a plate arc.

SPECIAL APPLICATION - Where it is desired to operate this tube under conditions widely different from those listed here, write to Power Grid Tube Division, EIMAC Division of Varian, 301 Industrial Way, San Carlos, California 94070 for information and recommendations.

TYPICAL CONSTANT CURRENT CHARACTERISTICS

GROUNDED CATHODE

——— PLATE CURRENT – AMPERES – – – – GRID CURRENT – AMPERES

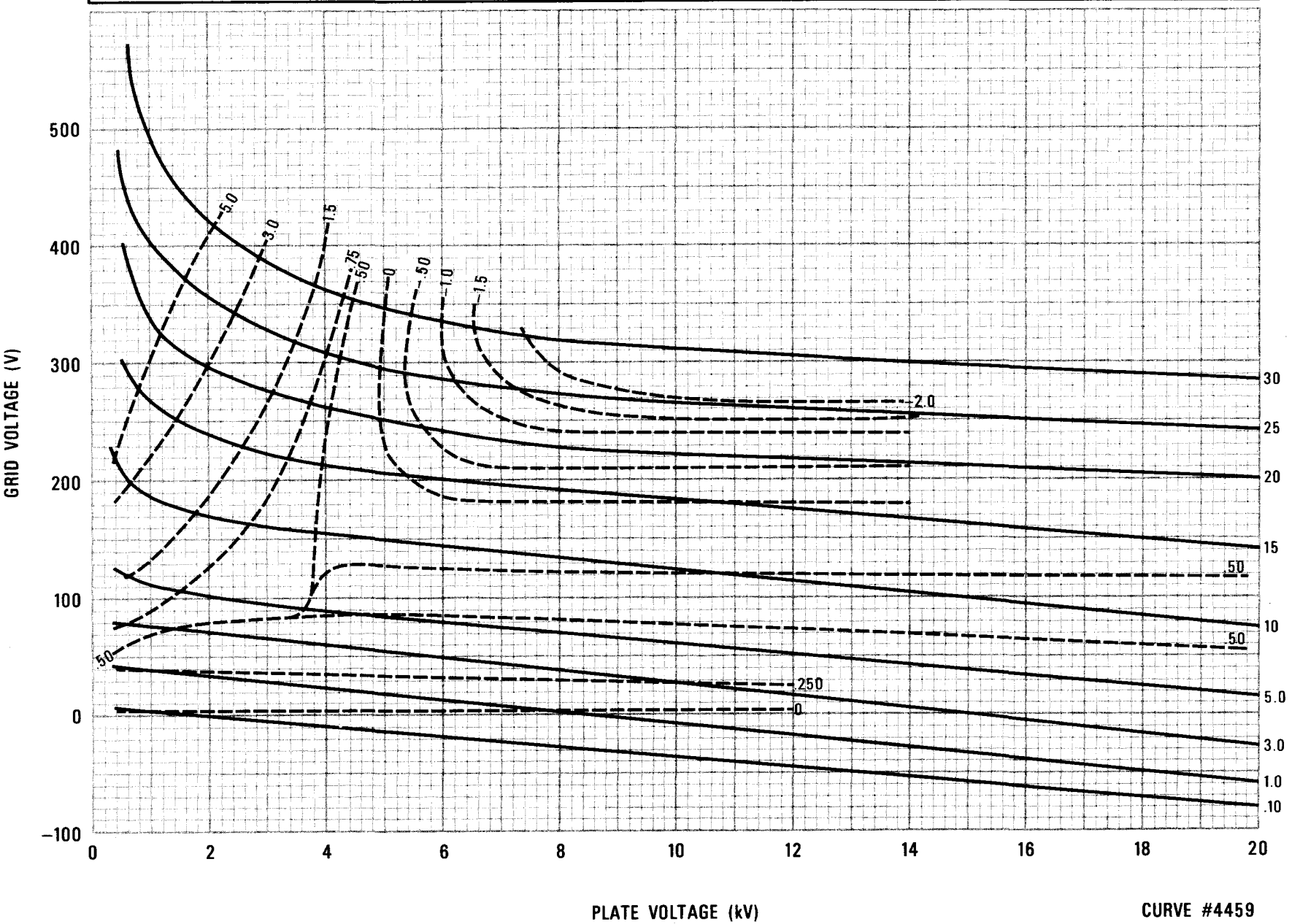

CURVE #4459

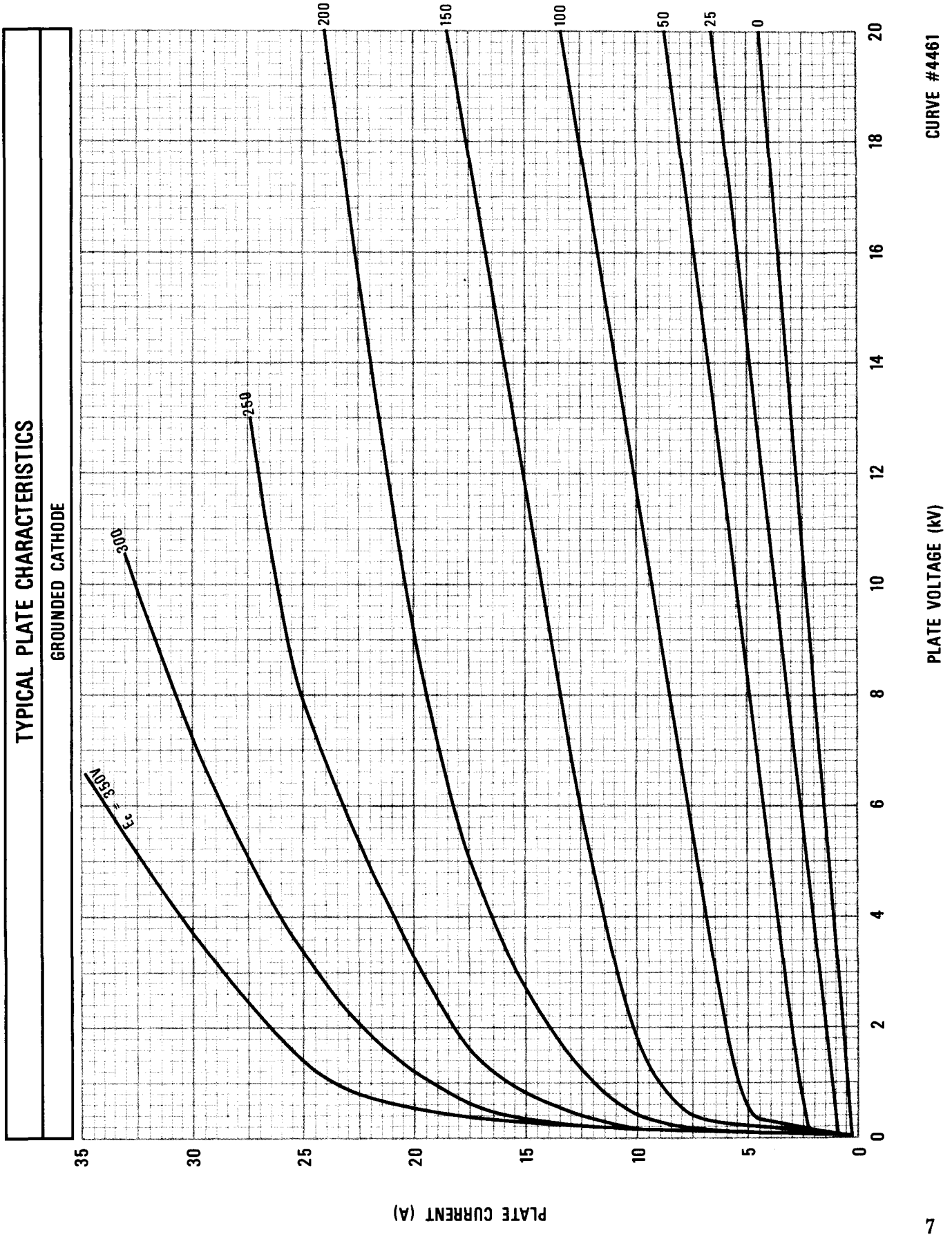
TYPICAL PLATE CHARACTERISTICS
GROUNDED CATHODE
Ec = 350V
300
250
200
150
100
50
25
0
PLATE CURRENT (A)
35
30
25
20
15
10
5
0
PLATE VOLTAGE (KV)
0
2
4
6
8
10
12
14
16
18
20
CURVE #4461

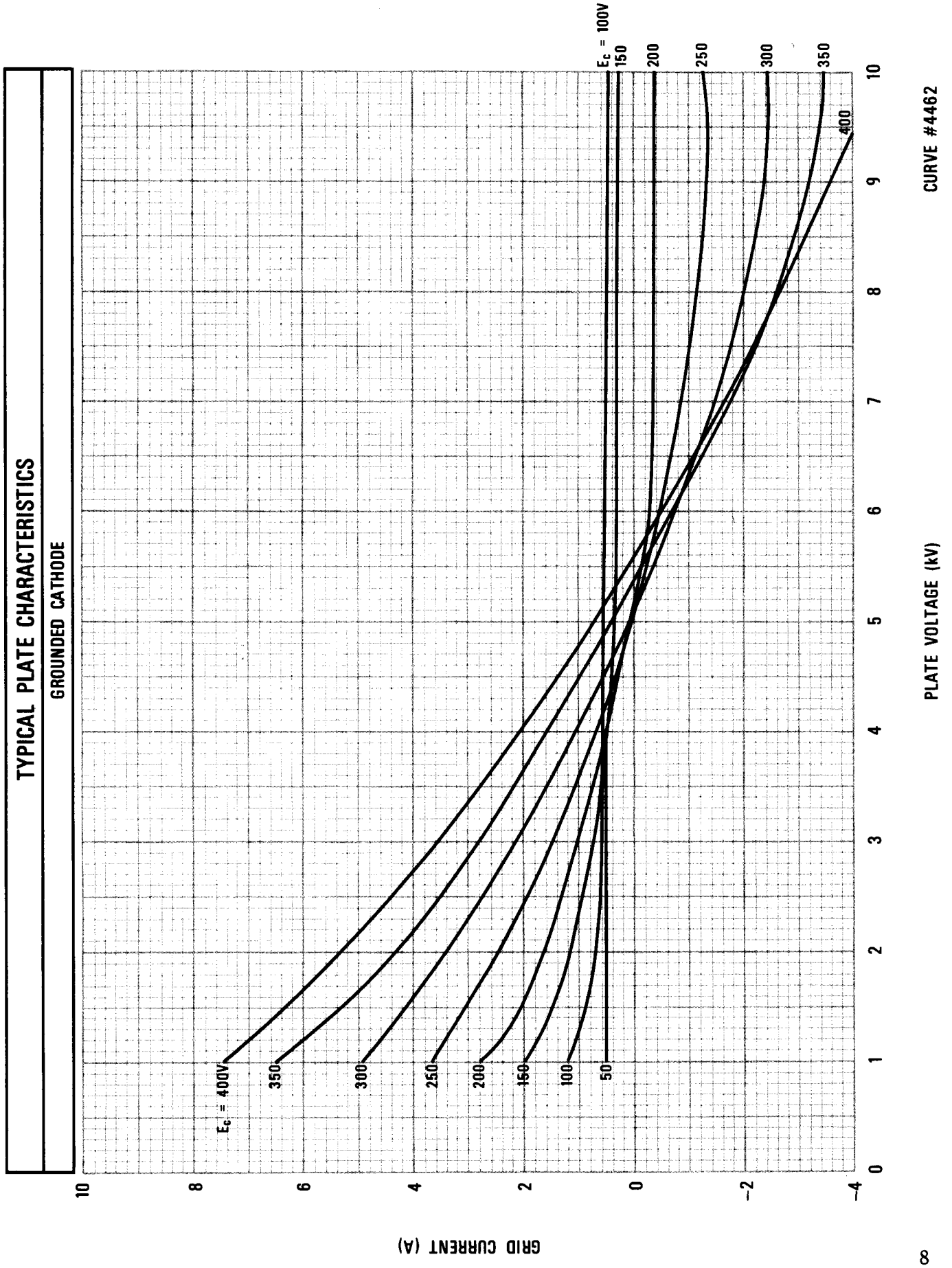
TYPICAL PLATE CHARACTERISTICS
GROUNDED CATHODE
E_c = 400V
350
300
250
200
150
100
50
E_c = 100V
150
200
250
300
350
400
10
8
6
4
2
0
-2
-4
GRID CURRENT (A)
0
1
2
3
4
5
6
7
8
9
10
PLATE VOLTAGE (kV)
CURVE #4462

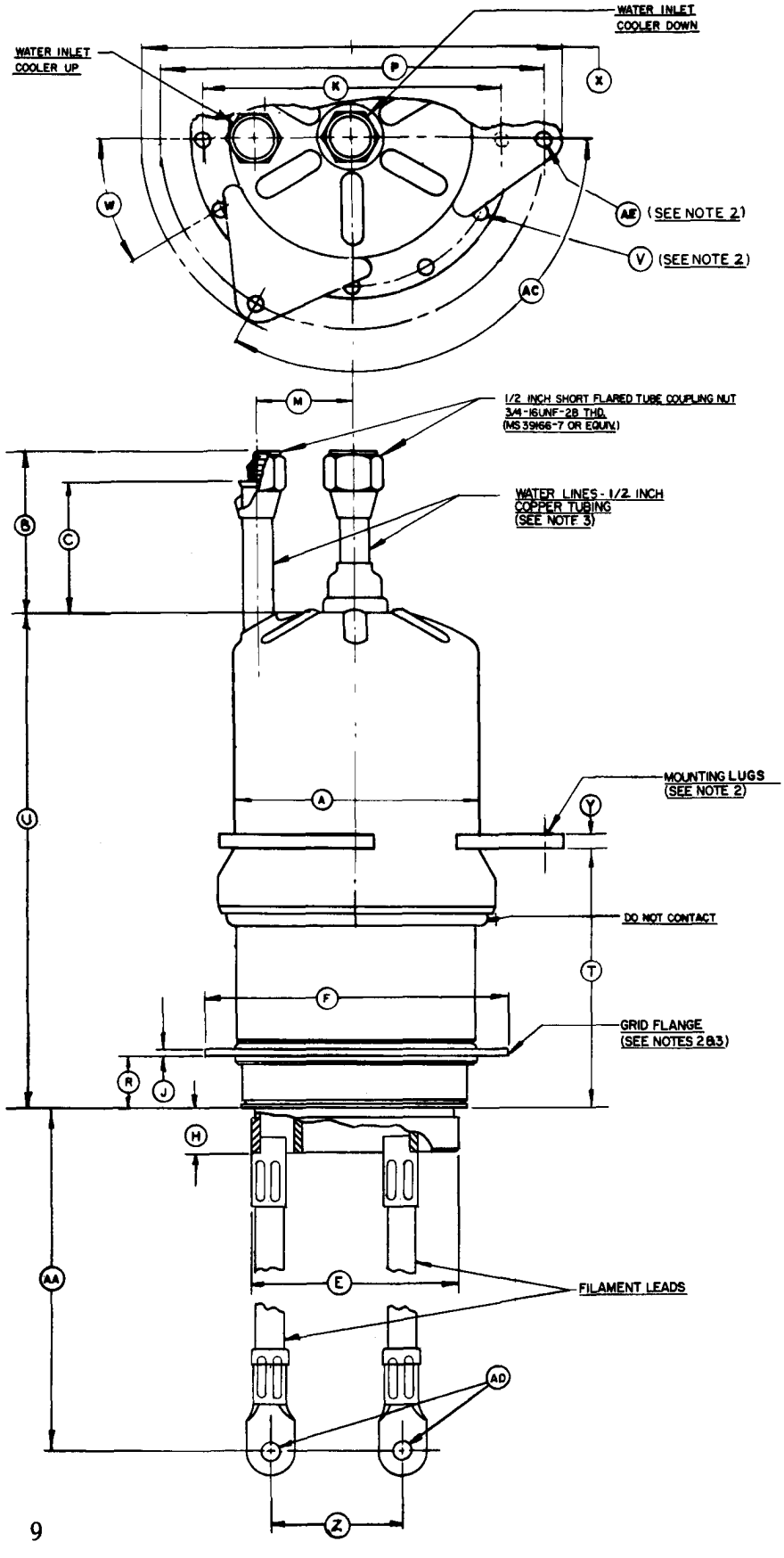

DIMENSIONAL DATA						
DIM	INCHES			MILLIMETERS		
	MIN.	MAX.	REF.	MIN.	MAX.	REF.
A	4.094	4.156	- -	103.99	105.56	- -
B	2.312	2.812	- -	56.72	71.42	- -
C	1.937	2.187	- -	49.20	55.55	- -
E	3.230	3.270	- -	82.04	83.06	- -
F	5.030	5.090	- -	127.76	129.29	- -
H	0.530	0.700	- -	13.46	17.78	- -
J	- -	- -	0.125	- -	- -	3.18
K	4.425	4.445	- -	112.40	112.90	- -
M	1.500	1.750	- -	38.10	44.45	- -
P	5.957	6.025	- -	151.31	153.04	- -
R	0.700	0.860	- -	17.78	21.84	- -
T	4.350	4.450	- -	110.49	113.03	- -
U	7.903	8.403	- -	200.74	213.44	- -
V	- -	- -	0.250	- -	- -	6.35
W	29°	31°	- -	29°	31°	- -
X	- -	- -	6.750	- -	- -	171.45
Y	- -	- -	0.250	- -	- -	6.35
Z	- -	- -	2.000	- -	- -	50.80
AA	8.500	9.000	- -	215.90	228.60	- -
AC	118°	122°	- -	118°	122°	- -
AD	- -	- -	0.390	- -	- -	9.91
AE	- -	- -	0.265	- -	- -	6.73

NOTES:
1. REF DIMS ARE FOR INFO. ONLY AND ARE NOT REQD FOR INSPECTION PURPOSES.
2. 3 MTG. HOLES IN MTG. LUGS & 12 IN THE GRID FLANGE.
3. GRID FLANGE, WATER FITTING & FIL. LEADS ORIENTED AS SHOWN.