3CW20,000H7

TECHNICAL DATA

WATER-COOLED
HIGH-MU
POWER TRIODE

The EIMAC 3CW20,000H7 is a ceramic/metal power triode intended for use as a dc voltage or current regulator, or in high-voltage switch tube or pulsed regulator service.

In addition, since the tube is identical to the EIMAC 3CW20,000A7 except for the anode and grid flanges and the addition of the filament flying leads, the tube is useful as a zero-bias Class B amplifier in audio or rf applications. Operation with zero grid bias offers circuit simplicity by eliminating the bias supply. In addition, grounded-grid operation is attractive since a power gain as high as twenty times can be obtained with the tube.

The anode dissipation rating is 20,000 watts with water cooling.

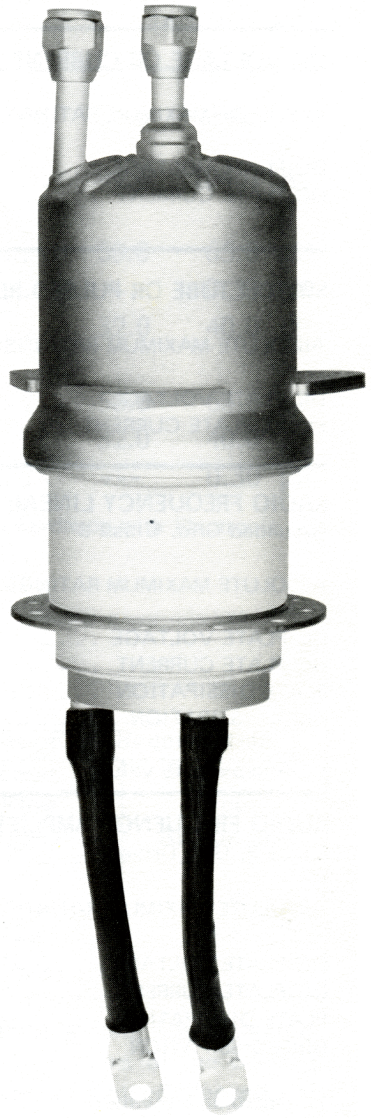

GENERAL CHARACTERISTICS[1]

ELECTRICAL

Filament: Thoriated Tungsten		
Voltage	7.5 ± 0.4	V
Current, at 7.5 V	100	A
Amplification Factor (Average)	200	
Direct Interelectrode Capacitances [2]		
Cin	59	pF
Cout	0.2	pF
Cgp	36	pF
Frequency of Maximum Rating (CW)	110	MHz

1. Characteristics and operating values are based on performance tests. These figures may change without notice as the result of additional data or product refinement. EIMAC Division of Varian should be consulted before using this information for final equipment design.

2. Capacitance values are for a cold tube as measured in a special shielded fixture in accordance with Electronic Industries Association Standard RS-191.

MECHANICAL

Base	Special, with grid contact flange & filament flying leads
Operating Position	Vertical, Anode up or down
Cooling	Water or equivalent liquid & forced air

(Effective 5-15-74) © by Varian

Printed in U.S.A.

Maximum Overall Dimensions:

Length (including filament leads)	20.7 in;	52.2 cm
Diameter (anode mounting flange pitch circle)	6.75 in;	17.1 cm

Maximum Operating Temperature:

Envelope & Ceramic/Metal Seals	250°C

Net Weight (Approximate)	10.6 lbs:	4.8 kg

DC VOLTAGE OR CURRENT REGULATOR

ABSOLUTE MAXIMUM RATINGS:

DC PLATE VOLTAGE	20	KILOVOLTS
DC PLATE CURRENT	7.5	AMPERES
PLATE DISSIPATION	20	KILOWATTS
GRID DISSIPATION	500	WATTS

SWITCH TUBE OR PULSED REGULATOR

ABSOLUTE MAXIMUM RATINGS:

DC PLATE VOLTAGE	20	KILOVOLTS
PULSE PLATE CURRENT	40	AMPERES
PLATE DISSIPATION	20	KILOWATTS
GRID DISSIPATION	500	WATTS

RADIO FREQUENCY LINEAR AMPLIFIER

Grounded Grid, Class B

ABSOLUTE MAXIMUM RATINGS:

DC PLATE VOLTAGE	7000	VOLTS
DC PLATE CURRENT	5.0	AMPERES
PLATE DISSIPATION	20	KILOWATTS
GRID DISSIPATION	500	WATTS

1. Approximate value.

TYPICAL OPERATION, Single-Tone Conditions

Plate Voltage	7000	7000	Vdc
Zero-Signal Plate Current[1]	0.60	0.60	Adc
Max. Signal Plate Current	3.72	5.00	Adc
Max. Signal Grid Current[1]	0.71	1.00	Adc
Driving Impedance	35	32	Ω
Resonant Load Impedance	1020	745	Ω
Max. Signal Driving Power[1]	885	1540	W
Peak Envelope Plate Output Power	17.7	24.2	kW
Power Gain[1]	20.0	15.7	times

AUDIO FREQUENCY AMPLIFIER OR MODULATOR

Class B, Grid Driven

ABSOLUTE MAXIMUM RATINGS:

DC PLATE VOLTAGE	7000	VOLTS
DC PLATE CURRENT	5.0	AMPERES
PLATE DISSIPATION	20	KILOWATTS
GRID DISSIPATION	500	WATTS

1. Approximate value.

TYPICAL OPERATION
Two Tubes, Sinusoidal Wave

Plate Voltage	5000	7000	Vdc
Grid Voltage	0	0	Vdc
Zero-Signal Plate Current[1]	0.8	1.2	Adc
Max. Signal Plate Current	10.0	10.0	Adc
Max. Signal Grid Current[1]	1.2	2.1	Adc
Driving Power[1]	290	560	W
Peak Audio Driving[1] Voltage (per tube)	240	310	v
Load Resistance, plate-to-plate	1030	1520	Ω
Max. Signal Plate Output Power[1]	31.0	47.7	kW

RADIO FREQUENCY LINEAR AMPLIFIER (AM DOUBLE SIDEBAND)

Carrier Conditions, Grounded-Grid Class B

ABSOLUTE MAXIMUM RATINGS:

DC PLATE VOLTAGE	7000	VOLTS
DC PLATE CURRENT	5.0	AMPERES
PLATE DISSIPATION	20	KILOWATTS
GRID DISSIPATION	500	WATTS

1. Approximate value.
2. Modulation Crest Conditions.

TYPICAL OPERATION

Plate Voltage	7000	Vdc
Grid Voltage	0	Vdc
Zero-Signal Plate Current[1]	0.6	Adc
Plate Current	2.4	Adc
Grid Current[1]	0.25	Adc
Driving Impedance[2]	32	Ω
Peak Driving Voltage[2]	310	v
Driving Power[1]	330	W
Plate Output Power[1]	5650	W

RADIO FREQUENCY POWER AMPLIFIER OR OSCILLATOR Class C

ABSOLUTE MAXIMUM RATINGS:

PLATE VOLTAGE	7000	VOLTS
PLATE CURRENT	4.0	AMPERES
PLATE DISSIPATION	20	KILOWATTS
GRID DISSIPATION	500	WATTS

1. Approximate value.

TYPICAL OPERATION

Plate Voltage	5000	7000	Vdc
Plate Current	4.0	4.0	Adc
Grid Voltage	-210	-230	Vdc
Grid Current[1]	840	775	mAdc
Peak rf Grid Voltage	510	555	v
Grid Driving Power	420	530	W
Plate Output Power[1]	14	21.3	kW

RANGE VALUES FOR EQUIPMENT DESIGN

	Min.	Max.	
Filament Current @ 7.5 Volts	94.0	104.0	A
Interelectrode Capacitance[1] (grounded cathode connection)			
Cin	53.0	65.0	pF
Cout	---	0.30	pF
Cgp	32.0	40.0	pF
Interelectrode Capacitance[1] (grounded grid connection)			
Cin	53.0	65.0	pF
Cout	32.0	40.0	pF
Cpk	---	0.30	pF

1. Capacitance values are for a cold tube as measured in a special shielded fixture in accordance with Electronic Industries Association Standard RS-191.

APPLICATION

MECHANICAL

MOUNTING - The 3CW20,000H7 must be operated vertically, anode down or up, and should be protected from shock and vibration. The anode mounting flange provides a convenient mounting means, and the grid is also provided with a flange for mating with a simple contact assembly. Both filament connections are made with flying leads approximately nine inches long with heavy lugs attached at the ends.

COOLING - The anode of the 3CW20,000H7 is cooled by circulating water through the integral anode water jacket. The cooling table shows minimum water-flow rates at various plate dissipation levels and assumes a temperature rise for the water of 10°C. Inlet water temperature should never exceed 55°C and outlet water temperature should never exceed 70°C. Where a liquid coolant other than water is used, the difference in cooling characteristics should be carefully considered and taken into account. Maximum system pressure must not exceed 50 psi.

Minimum Cooling Water-Flow Requirements		
Plate Dissipation (kW)	Water Flow (gpm)	Pressure Drop Approx. psi
10	11.0	11.5
15	12.0	13.5
20	14.0	17.0

A major factor effecting long life of water-cooled tubes is the condition of the cooling water. If the cooling water is ionized, deposits of copper oxide will form on the internal parts of the water jacket and can cause localized heating of the anode and eventual failure of the tube.

A simple method of determining the condition of the water is to measure the resistance across a known volume. The resistance of the water should be maintained above 50 $K\Omega/cm^3$, and preferably above 250 $K\Omega/cm^3$. A relative water resistance check can be made continuously by

measuring the leakage current which will bypass a short section of insulating hose column if metal nipples or fittings are used as electrodes.

Forced-air cooling of the base is also required, with 30 to 50 cfm of air at 50°C maximum directed up into and around the base of the tube to cool the grid and filament contact areas.

Both anode and base cooling should be applied before or simultaneously with electrode voltages, including the filament, and should normally be maintained for a short period of time after all voltages are removed to allow for tube cooldown.

ELECTRICAL

FILAMENT OPERATION - Filament voltage should be measured at the terminals with a 1 percent rms responding meter. The peak emission at rated filament voltage of the EIMAC 3CW20,000H7 is normally many times the peak emission required for communication service. A small decrease in filament temperature due to reduction of filament voltage can increase the life of the 3CW20,000H7 by a substantial percentage. It is good practice to determine the nominal filament voltage for a particular application that will not adversely affect equipment operation. This is done by measuring some important parameter of performance such as plate current, power output, or an increase in distortion. Operation must be at a filament voltage slightly higher than the point at which performance appears to deteriorate.

INPUT CIRCUIT - When the 3CW20,000H7 is operated as a grounded-grid rf amplifier, the use of a resonant tank in the cathode circuit is recommended in order to obtain greatest linearity and power output. For best results with a single-ended amplifier, it is suggested that the cathode tank circuit operate at a "Q" of two or more.

CLASS-C OPERATION - Although designed specifically for Class-B service,the 3CW20,000H7 may be operated as a Class-C amplifier or oscillator or as a plate-modulated radio-frequency amplifier. The zero-bias characteristic can be used to advantage in Class-C amplifiers by employing only grid leak bias. If driving power should fail, plate dissipation is then kept to a low value because the tube will be operating at normal, static, zero-bias conditions.

STANDBY OPERATION - Coolant must be circulated through the anode water jacket whenever filament power is applied even though no other voltages are present. Sixty to eighty percent of the filament power appears as heat in the anode. In the absence of coolant flow, temperatures will rise to levels which are detrimental to long life. If the coolant lines are obstructed the coolant jacket may rupture from the generated steam pressure.

HIGH VOLTAGE - Normal operating voltages used with this tube are deadly, and the equipment must be designed properly and operating precautions must be followed. Design all equipment so that no one can come in contact with high voltages. All equipment must include safety enclosures for high-voltage circuits and terminals, with interlock switches to open primary circuits of the power supply and to discharge high-voltage condensers whenever access doors are opened. Interlock switches must not be bypassed or "cheated" to allow operation with access doors open. Always remember that HIGH VOLTAGE CAN KILL.

X-RADIATION - High-vacuum tubes operating at voltages higher than 10 kilovolts produce progressively more dangerous X-ray radiation as the voltage is increased. This tube, operating at its rated voltages and currents, is a potential X-ray hazard. Only limited shielding is afforded by the tube envelope. Moreover, the X-ray radiation level can increase significantly with aging and gradual deterioration, due to leakage paths or emission characteristics as they are effected by the high voltage. X-ray shielding must be provided on all sides of tubes operating at these voltages to provide adequate protection throughout the tube's life. Periodic checks on the X-ray level should be made, and the tube should never be operated without adequate shielding in place when voltages above 10 kilovolts are in use. Lead glass, which attenuates X-rays, is available for viewing windows. If there is any doubt as to the requirement for or the adequacy of shielding, an expert in this field should be contacted to perform an X-ray survey of the equipment.

Operation of high-voltage equipment with interlock switches "cheated" and cabinet doors open in order to be better able to locate an equipment malfunction can result in serious X-ray exposure.

RADIO FREQUENCY RADIATION - Avoid exposure to strong rf fields even at relatively low frequency. Absorption of rf energy by human tissue is dependent on frequency. Under 30 MHz, most of the energy will pass completely through the human body with little attenuation or heating effect. Public health agencies are concerned with the hazard, however, even at these frequencies, and it is worth noting that some commercial dielectric heating units actually operate at frequencies as low as the 13 and 27 MHz bands.

Many EIMAC power tubes, such as the 3CW-20,000H7, are specifically designed to generate or amplify radio frequency power. There may be a relatively strong rf field in the general proximity of the power tube and its associated circuitry---the more power invloved, the stronger the rf field. Proper enclosure design and efficient coupling of rf energy to the load will minimize the rf field in the vicinity of the power amplifier unit itself.

FAULT PROTECTION - In addition to normal plate over-current interlock, screen current interlock, and coolant flow interlock, it is good practice to protect the tube from internal damage which could result from occasional plate arcing at high anode voltage.

In all cases some protective resistance, 5 ohms to 25 ohms, should be used in series with each tube anode to absorb power supply stored energy in case a plate arc should occur. If power supply stored energy exceeds 750 watt seconds, we strongly recommend use of some form of electronic crowbar which will discharge power supply capacitors in a few microseconds following indication of start of a plate arc.

SPECIAL APPLICATION - Where it is desired to operate this tube under conditions widely different from those listed here, write to Power Grid Tube Division, EIMAC Division of Varian, 301 Industrial Way, San Carlos, California 94070 for information and recommendations.

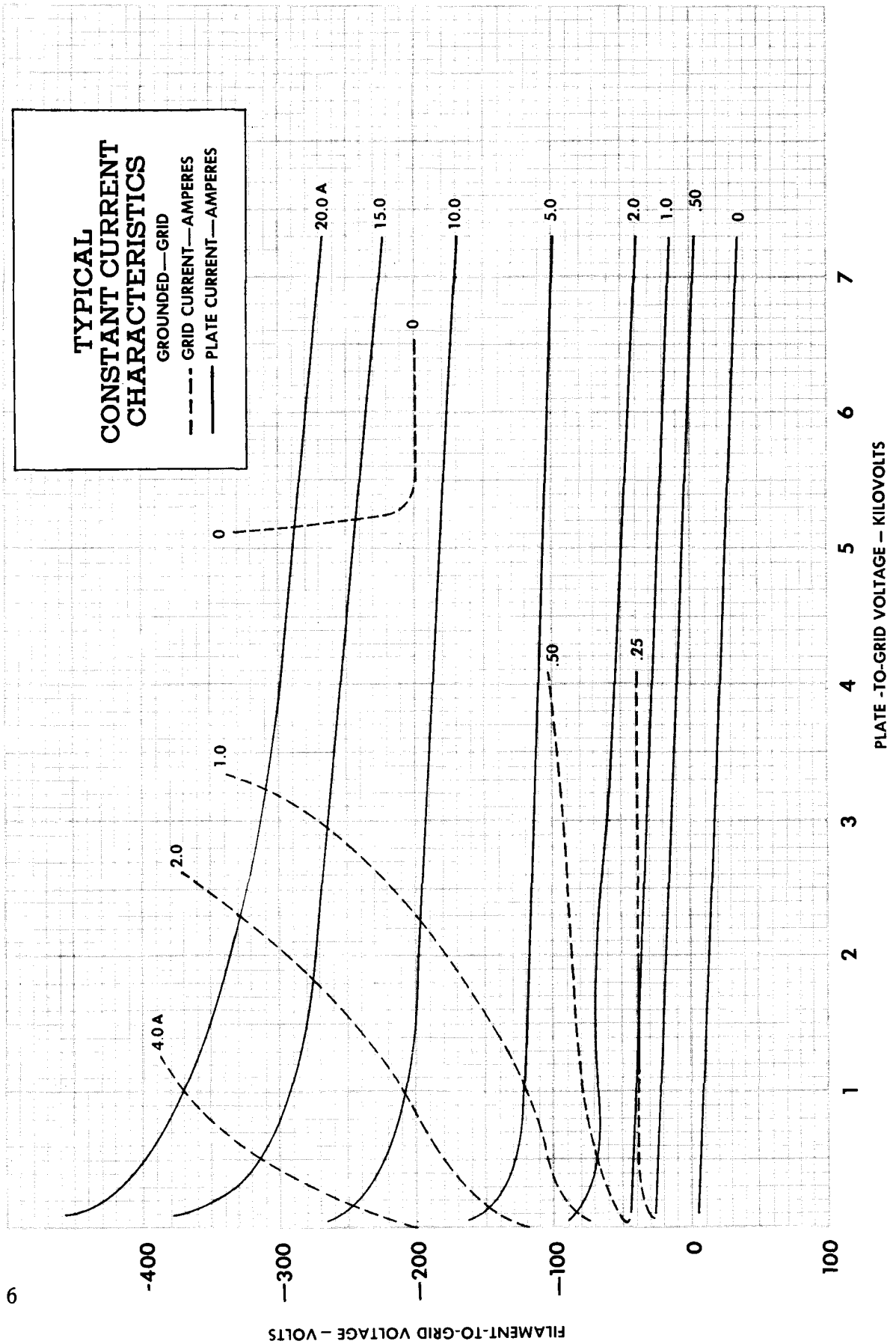
TYPICAL
CONSTANT CURRENT
CHARACTERISTICS
GROUNDED—GRID
GRID CURRENT—AMPERES
PLATE CURRENT—AMPERES
20.0 A
15.0
10.0
5.0
2.0
1.0
.50
0
0
1.0
2.0
4.0 A
.50
.25
-400
-300
-200
-100
0
100
1
2
3
4
5
6
7
PLATE -TO-GRID VOLTAGE – KILOVOLTS
FILAMENT-TO-GRID VOLTAGE – VOLTS

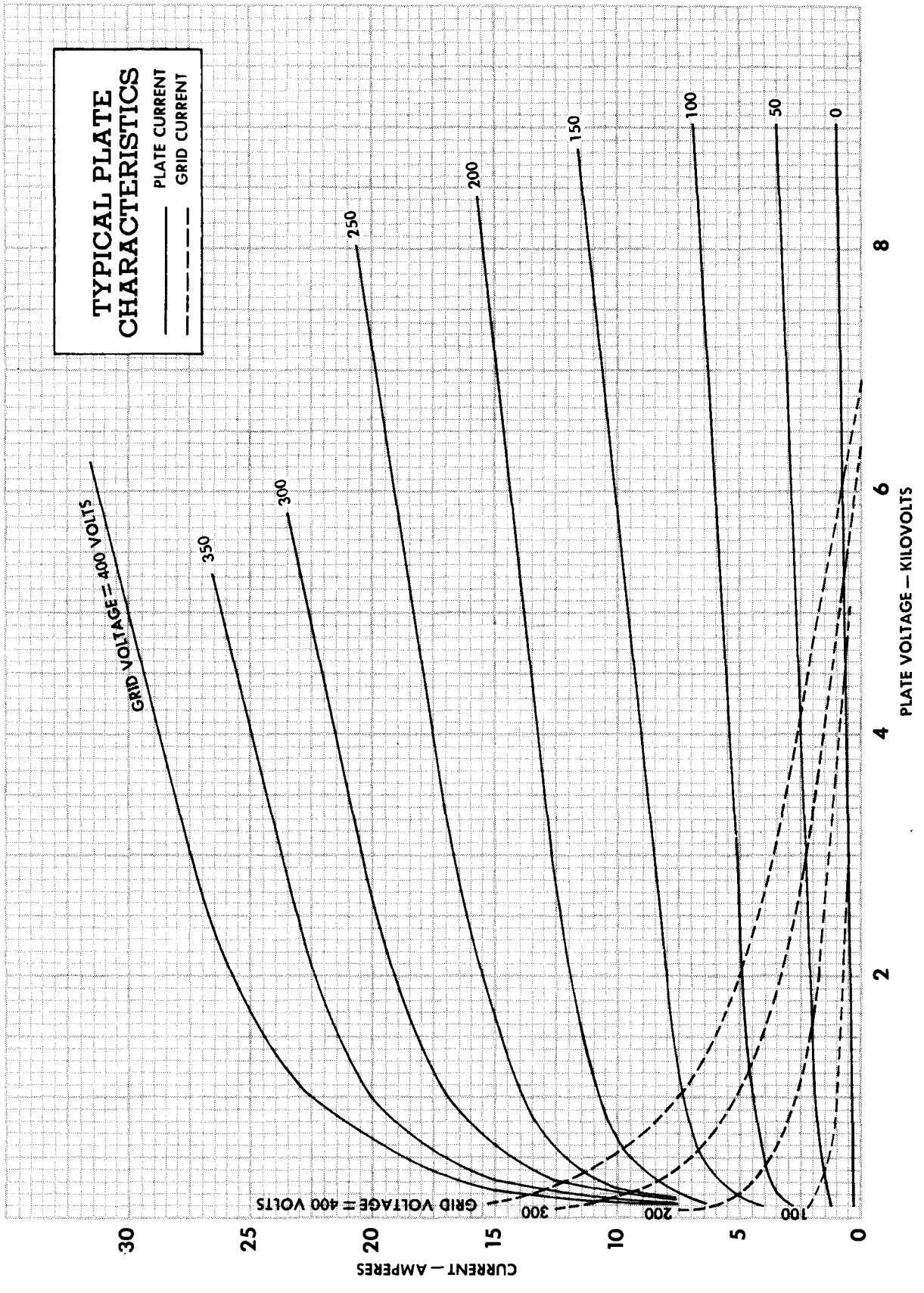
TYPICAL PLATE CHARACTERISTICS
PLATE CURRENT
GRID CURRENT
GRID VOLTAGE = 400 VOLTS
350
300
250
200
150
100
50
0
GRID VOLTAGE = 400 VOLTS
300
200
100
CURRENT — AMPERES
30
25
20
15
10
5
0
2
4
6
8
PLATE VOLTAGE — KILOVOLTS

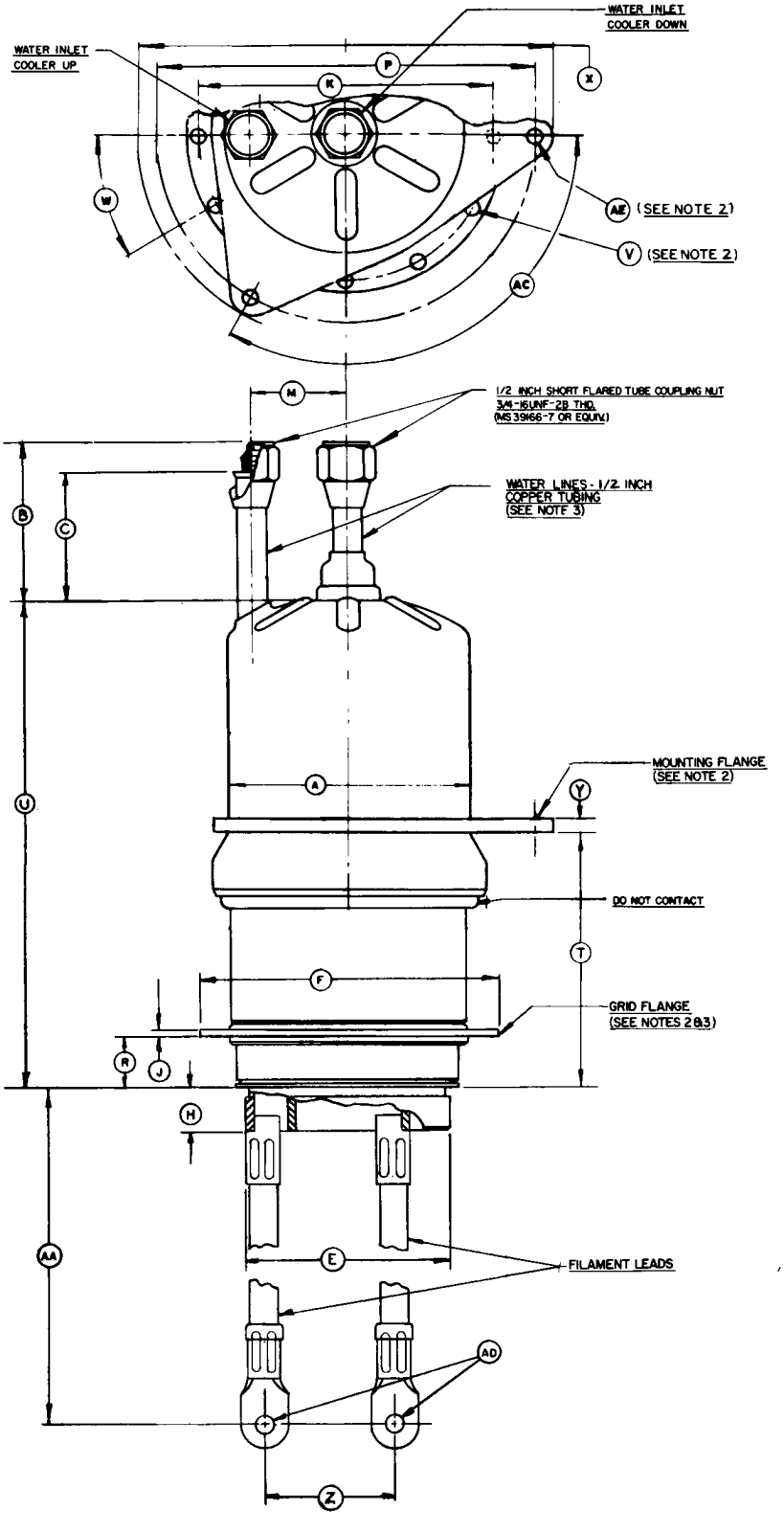

DIMENSIONAL DATA						
DIM	INCHES			MILLIMETERS		
	MIN.	MAX.	REF.	MIN.	MAX.	REF.
A	4.094	4.156	- -	103.99	105.56	- -
B	2.312	2.812	- -	56.72	71.42	- -
C	1.937	2.187	- -	49.20	55.55	- -
E	3.230	3.270	- -	82.04	83.06	- -
F	5.030	5.090	- -	127.76	129.29	- -
H	0.530	0.700	- -	13.46	17.78	- -
J	- -	- -	0.125	- -	- -	3.18
K	4.425	4.445	- -	112.40	112.90	- -
M	1.500	1.750	- -	38.10	44.45	- -
P	5.957	6.025	- -	151.31	153.04	- -
R	0.700	0.860	- -	17.78	21.84	- -
T	4.350	4.450	- -	110.49	113.03	- -
U	7.903	8.403	- -	200.74	213.44	- -
V	- -	- -	0.250	- -	- -	6.35
W	29°	31°	- -	29°	31°	- -
X	- -	- -	6.750	- -	- -	171.45
Y	- -	- -	0.250	- -	- -	6.35
Z	- -	- -	2.000	- -	- -	50.80
AA	8.500	9.000	- -	215.90	228.60	- -
AC	118°	122°	- -	118°	122°	- -
AD	- -	- -	0.390	- -	- -	9.91
AE	- -	- -	0.265	- -	- -	6.73

NOTES:

1. REFERENCE DIMENSIONS ARE FOR INFO ONLY AND ARE NOT REQ'D FOR INSPECTION PURPOSES.
2. 3 MTG. HOLES IN MTG FLANGE AND 12 IN THE GRID FLANGE.
3. GRID FLANGE, WATER FITTINGS, AND FIL. LEADS ORIENTED AS SHOWN.