EIMAC
Division of Varian
SAN CARLOS
CALIFORNIA

3CW20,000H3

MEDIUM-MU

WATER-COOLED POWER TRIODE

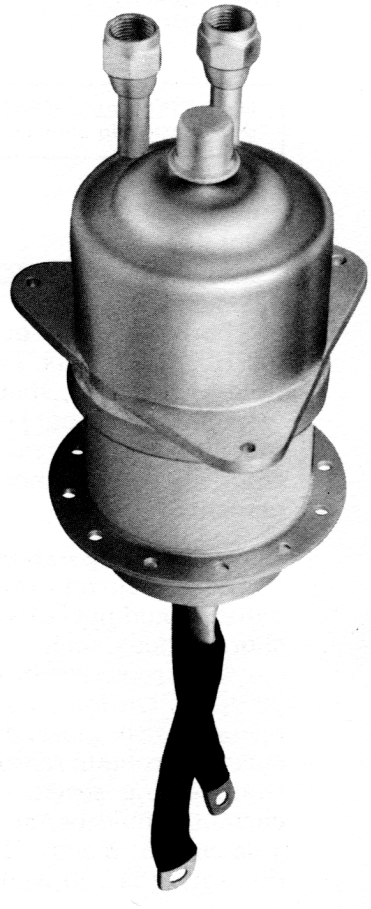

The Eimac 3CW20,000H3 is a water-cooled, ceramic-metal power triode designed primarily for use in industrial radio-frequency heating services. Its water-cooled anode is conservatively rated at 20 kilowatts of plate dissipation with low water flow and pressure drop.

Input of 40 kilowatts is permissable up to 90 megacycles. Plentiful reserve emission is available from its 750 watt filament. The grid structure is rated at 250 watts, making this tube an excellent choice for severe applications.

GENERAL CHARACTERISTICS

ELECTRICAL

	Min.	*Nom.*	*Max.*	
Filament: Thoriated-Tungsten				
Voltage		7.5		volts
Current	94		104	amps
Amplification Factor		20		
Interelectrode Capacitances, Grounded Cathode:				
Grid-Filament	48		58	μμf
Plate-Filament	1.2		1.5	μμf
Grid-Plate	30		38	μμf
Frequency for Maximum Ratings			90	Mc

MECHANICAL

Base	See Outline
Operating Position	Vertical, base up or down
Cooling	Water and Forced Air
Maximum Operating Temperatures:	
Ceramic-to-Metal Seals	250°C
Maximum Dimensions:	
Height	See Outline
Diameter	See Outline
Net Weight	12 pounds

(Effective 2-1-65) © 1965, 1968 by Varian

Printed in U.S.A.

RF INDUSTRIAL OSCILLATOR
Class-C (Filtered DC Power Supply)

MAXIMUM RATINGS:

DC PLATE VOLTAGE	12,000 VOLTS
DC PLATE CURRENT	4.0 AMPS
DC GRID VOLTAGE	—1000 VOLTS
DC GRID CURRENT	0.6 AMP
PLATE INPUT POWER	40 KW
PLATE DISSIPATION (NOMINAL)	20 KW

TYPICAL OPERATION*

DC Plate Voltage	7000	10,000 volts
DC Plate Current	4.0	4.0 amps
DC Grid Voltage	—670	—800 volts
DC Grid Current	.275	.315 amps
Peak Positive Grid Voltage	340	340 volts
Driving Power	260	340 watts
Plate Input Power	28	40 kW
Plate Dissipation	9	12 kW
Plate Output Power	19	28 kW
Approximate Load Impedance	720	1270 ohms

*Loaded Conditions

Note: "TYPICAL OPERATION" data are obtained by calculation from published characteristic curves and confirmed by direct tests. No allowance for circuit losses, either input or output, has been made.

APPLICATION

ELECTRICAL

Filament

The rated filament voltage for the 3CW20,-000H3 is 7.5 volts. Filament voltage, as measured at the tube, should be maintained at this value for consistent performance and maximum tube life. In no case should it be allowed to vary from 7.5 volts by more than plus or minus five percent.

Control Grid Operation

The grid current rating is 0.6 ampere dc. This value should not be exceeded for more than very short periods such as during tuning and over-current protection in the grid circuit should be provided. Ordinarily it will not be necessary to operate with more than 0.2 to 0.4 amp grid current to obtain reasonable efficiency. In industrial heating service with varying loads, grid current should be monitored continuously with a dc current meter. The maximum grid dissipation rating is 250 watts.

Plate Operation

Maximum plate voltage rating of 12,000 volts and maximum plate current of 4.0 amps should not be applied simultaneously as rated plate dissipation may be exceeded. The 40 kilowatts input rating applies for Class C amplifier or oscillator service with no modulation.

Plate over-current protection should be provided to remove plate voltage quickly in the event of an over-load or an arc-over at the load. In addition current limiting power supply resistors should be used. These precautions are especially important in industrial service with its wide variations in loading.

Spark gaps from plate to ground should be used to prevent transient voltages from flashing across the tube envelope during any fault conditions.

High Frequency Operation

The 3CW20,000H3 is usable to 140 Mc. At this frequency, plate voltage must be reduced to 7000 volts in Class C service.

MECHANICAL

Mounting

The 3CW20,000H3 must be mounted vertically, either base up or down.

Cooling

The anode of the 3CW20,000H3 is cooled by circulating water through the integral anode-water jacket. The table below lists minimum water-flow rates at various plate dissipation levels. The table is based upon a water temperature rise of 20°C.

MINIMUM COOLING WATER-FLOW REQUIREMENTS

Plate Dissipation (kW)	Water Flow (gpm)	Pressure Drop (psi)
10	2	2.5
15	3	3.0
20	4	3.5
25	5	4.0

Since power dissipated by the filament represents 750 watts and grid dissipation can reach 250 watts, 1000 watts has been added to anode dissipation in preparing this tabulation.

The cooling table assumes that the maximum outlet-water temperature will be below 70°C to preclude "spot" boiling.

Additional forced-air cooling of the tube's base is also required to maintain ceramic-to-metal seal temperatures below the 250°C maximum. Approximately 40 cfm of cooling air directed into the base structure will generally satisfy this requirement.

Special Application

If it is desired to operate this tube under conditions widely different from those given here, write to Power Grid Tube Div., Eimac Division of Varian, 301 Industrial Way, San Carlos, Calif. for information and recommendations.

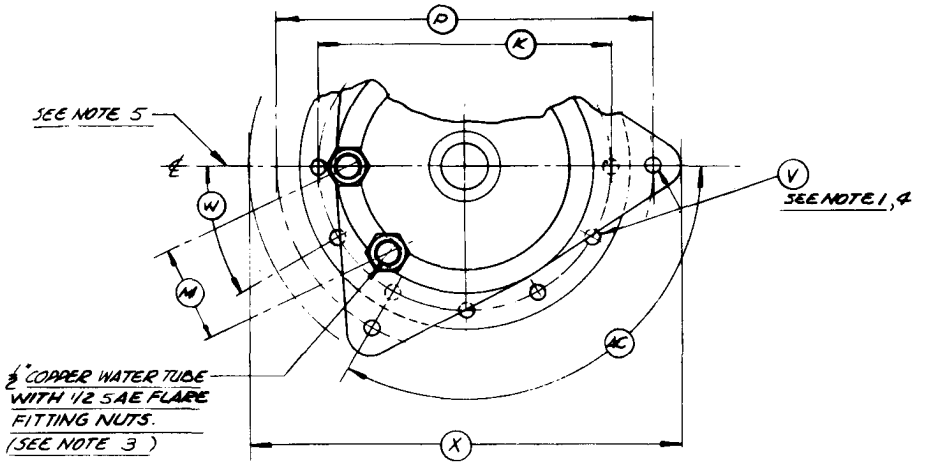

DIMENSIONS IN INCHES			
DIMENSIONAL DATA			
DIM.	MIN.	MAX.	REF.
A	4.050	4.250	
B	.860	.890	
C	.720	.760	
F	3.792	3.832	
H	.530	.700	
J			.125
K	4.425	4.445	
L	5.030	5.090	
M			1.500
N	.375		
P	5.990	6.010	
R	.800	.860	
S	3.300	3.500	
T	3.950	4.100	
U	8.250	8.750	
V			.250
W	29°	31°	
X			6.750
Y			.250
Z			2.000
AA	8.500	9.000	
AB			2.000
AC	118°	122°	
AD			.390

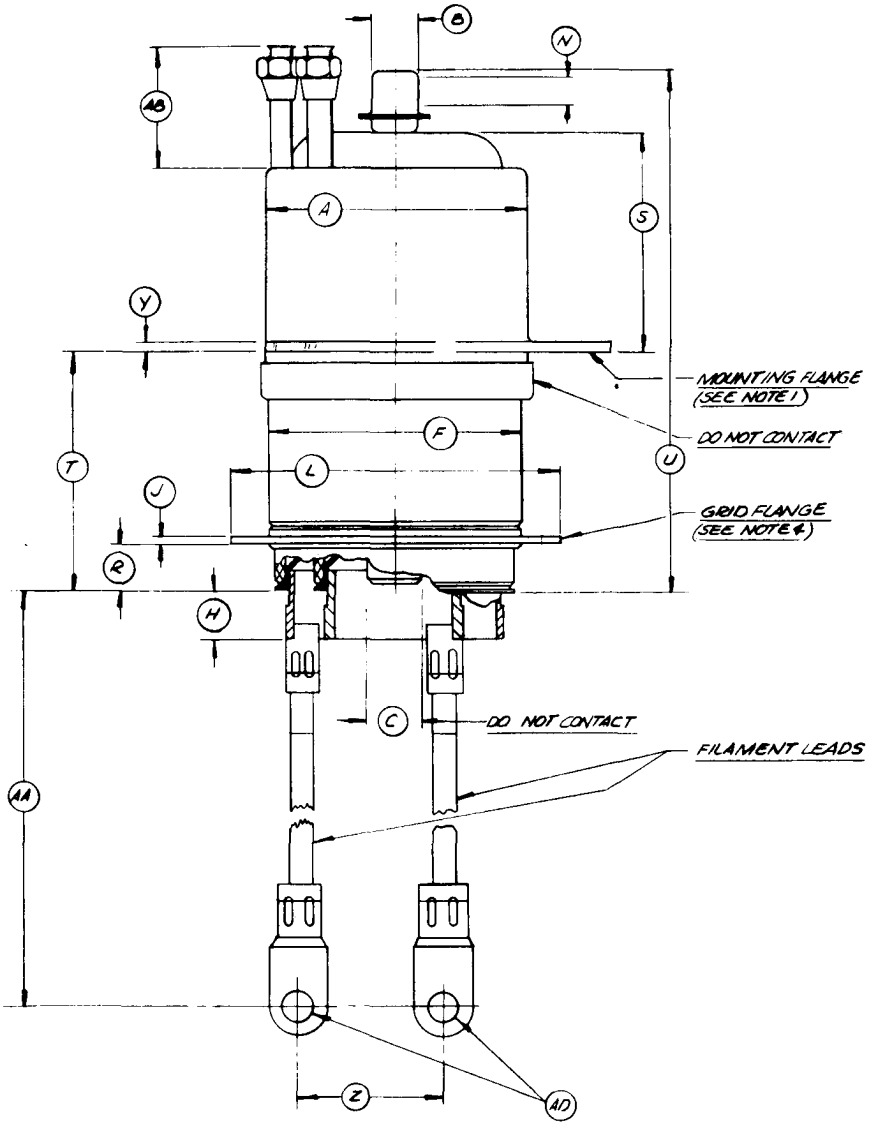

NOTES:
1. 3 MOUNTING HOLES IN MTG FLANGE.
2. REF. DIMS. ARE FOR INFO. ONLY AND ARE NOT REQ'D FOR INSP. PURPOSES.
3. EITHER FITTING CAN BE USED AS INLET OR OUTLET.
4. 12 HOLES IN GRID FLANGE
5. MTG. FLANGE, FIL. LEADS & WATER FITTINGS ARE TO BE ORIENTED AS SHOWN.

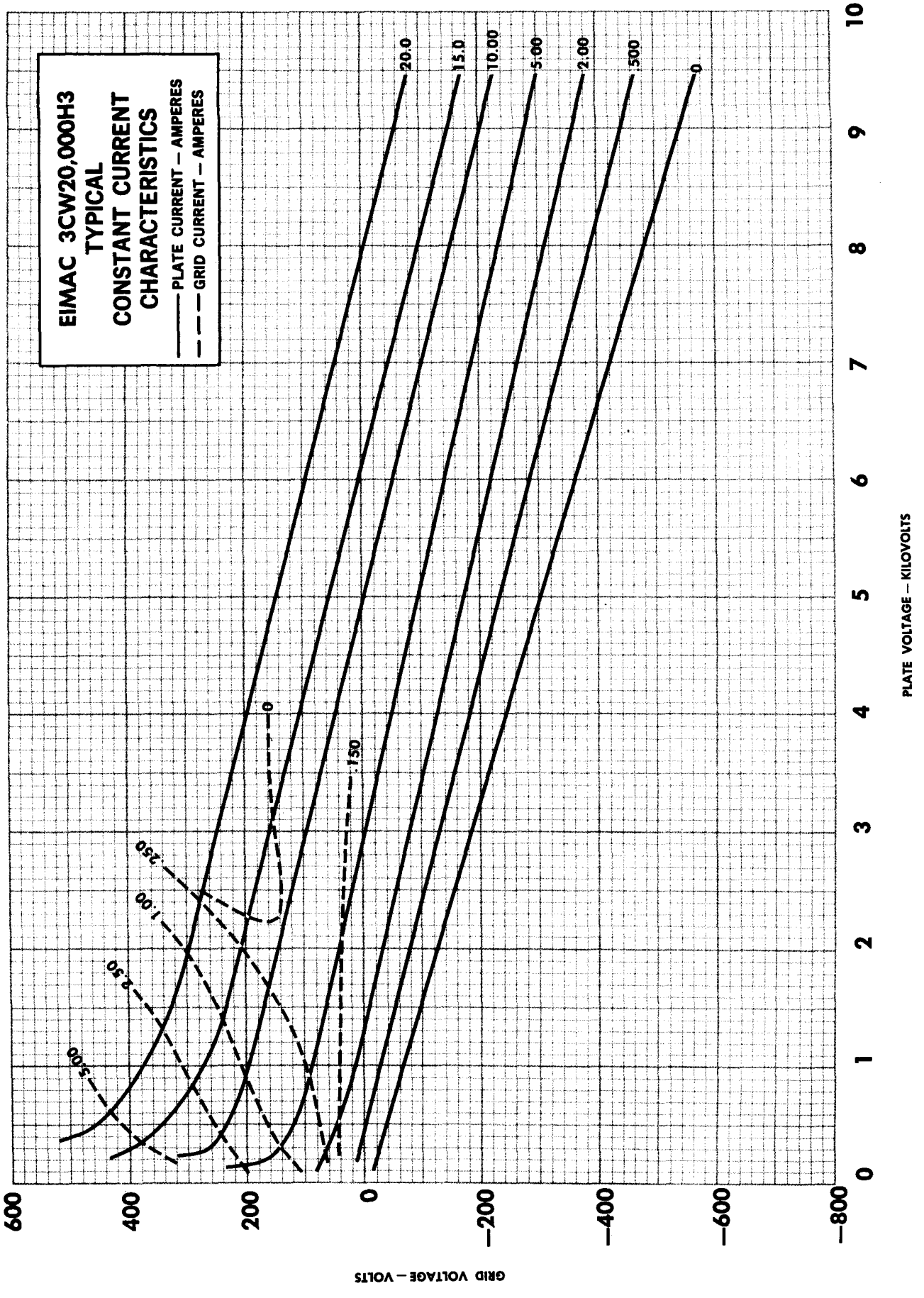
EIMAC 3CW20,000H3
TYPICAL
CONSTANT CURRENT
CHARACTERISTICS
PLATE CURRENT – AMPERES
GRID CURRENT – AMPERES
20.0
15.0
10.00
5.00
2.00
.500
0
.150
0
.250
1.00
2.50
5.00
600
400
200
0
−200
−400
−600
−800
GRID VOLTAGE – VOLTS
0
1
2
3
4
5
6
7
8
9
10
PLATE VOLTAGE – KILOVOLTS