TECHNICAL DATA

3CW20,000A7

WATER-COOLED HIGH-MU POWER TRIODE

The Eimac 3CW20,000A7 is a ceramic and metal power triode intended to be used as a zero-bias Class-B amplifier in audio or radio-frequency applications. Operation with zero grid bias offers circuit simplicity by eliminating the bias supply. In addition, grounded-grid operation is attractive since a power gain as high as twenty times can be obtained with the 3CW20,000A7.

The 3CW20,000A7 is electrically identical to the air-cooled 3CX10,000A7 except for its 20kW plate dissipation rating.

GENERAL CHARACTERISTICS

ELECTRICAL

	Min.	Nom.	Max.	
Filament: Thoriated-Tungsten				
Voltage		7.5		volts
Current	94		104	amperes
Amplification Factor		200		

Direct Interelectrode Capacitances:	Min.	Max.
Grid-Filament	50.0	62.0 uuf
Grid-Plate	32.0	40.0 uuf
Plate-Filament		0.3 uuf
Frequency for Maximum Ratings		140 Mc

MECHANICAL

Base	Coaxial
Recommended Socket	Eimac SK-1300
Operating Position	Vertical, base up or down
Cooling	Water and Forced air
Maximum Operating Temperatures:	
Anode Core	250° C
Ceramic-to-Metal Seals	250° C
Maximum Dimensions:	
Height	11.4 inches
Diameter	4.7 inches
Net Weight	12 pounds

RADIO-FREQUENCY LINEAR AMPLIFIER

Grounded Grid, Class-B

MAXIMUM RATINGS

DC PLATE VOLTAGE	7000 MAX. VOLTS
DC PLATE CURRENTS	5.0 MAX. AMPS
PLATE DISSIPATION	20 MAX. KW
GRID DISSIPATION	500 MAX. WATTS

*Approximate Values

TYPICAL OPERATION, Single-Tone Conditions

DC Plate Voltage	7000	7000 volts
Zero-Sig DC Plate Current*	0.60	0.60 amps
Max-Sig DC Plate Current	3.72	5.00 amps
Max-Sig DC Grid Current	0.71	1.00 amp
Driving Impedance	35	32 ohms
Resonant Load Impedance	1020	745 ohms
Max-Sig Driving Power	885	1540 watts
Peak Envelope Plate Output Power	17,700	24,200 watts
Power Gain	20.0	15.7 times

(Effective 1-1-63) © Copyright 1963 by Eitel-McCullough, Inc.

AUDIO-FREQUENCY AMPLIFIER OR MODULATOR

Class-B, Grid Driven

MAXIMUM RATINGS (Per Tube)

DC PLATE VOLTAGE	7000 MAX. VOLTS
DC PLATE CURRENT	5.0 MAX. AMPS
PLATE DISSIPATION	20 MAX. KW
GRID DISSIPATION	500 MAX. WATTS

*Approximate Values

TYPICAL OPERATION, Two Tubes, Sinusoidal Wave

DC Plate Voltage	5000	7000	volts
DC Grid Voltage	0	0	volts
Zero-Sig DC Plate Current*	1.2	1.2	amps
Max-Sig DC Plate Current	10.0	10.0	amps
Max-Sig DC Grid Current	1.2	2.1	amps
Driving Power	290	560	watts
Peak AF Driving Voltage (Per Tube)	240	310	volts
Load Resistance, Plate-to-Plate	1030	1520	ohms
Max-Sig Plate Output Power	31,000	47,700	watts

RADIO-FREQUENCY LINEAR AMPLIFIER

Carrier Conditions, Grounded-Grid, Class-B_2

MAXIMUM RATINGS

DC PLATE VOLTAGE	7000 MAX. VOLTS
DC PLATE CURRENT	5.0 MAX. AMPS
PLATE DISSIPATION	20 MAX. KW
GRID DISSIPATION	500 MAX. WATTS

*Approximate Values
†Modulation Crest Conditions

TYPICAL OPERATION

DC Plate Voltage	7000	volts
DC Grid Voltage	0	volts
Zero-Sig DC Plate Current*	0.6	amp
DC Plate Current	2.4	amps
DC Grid Current	0.25	amp
Driving Impedance†	32	ohms
Peak Driving Voltage†	310	volts
Driving Power	330	watts
Plate Output Power	5650	watts

RADIO-FREQUENCY POWER AMPLIFIER OR OSCILLATOR, Class-C

MAXIMUM RATINGS

DC PLATE VOLTAGE	7000 MAX.VOLTS
DC PLATE CURRENT	4.0 MAX. AMPS
PLATE DISSIPATION	20 MAX. KW
GRID DISSIPATION	500 MAX. WATTS

TYPICAL OPERATION

DC Plate Voltage	5000	7000	volts
DC Plate Current	4.0	4.0	amps
DC Grid Voltage	-210	-230	volts
DC Grid Current	840	775	mA
Peak RF Grid Voltage	510	555	volts
Grid Driving Power	420	530	watts
Plate Output Power	14	21.3	kW

PLATE-MODULATED RADIO-FREQUENCY POWER AMPLIFIER, Class-C

MAXIMUM RATINGS

DC PLATE VOLTAGE	5500 MAX. VOLTS
DC PLATE CURRENT	3.0 MAX. AMPS
PLATE DISSIPATION†	13.5 MAX. KW
GRID DISSIPATION	500 MAX. WATTS

†Corresponds to 20 kW at 100% sine-wave modulation

TYPICAL OPERATION

DC Plate Voltage	5000	volts
DC Plate Current	3.0	amps
DC Grid Voltage	-200	volts
DC Grid Current	775	mA
Peak RF Grid Voltage	490	volts
Grid Driving Power	380	watts
Plate Output Power	11.9	kW

Note: "TYPICAL OPERATION" data are obtained by calculation from published characteristic curves and confirmed by direct tests. No allowance for circuit losses, either input or output, has been made. Adjustment of the rf grid drive to obtain the specified zero-signal plate current at the specified bias and plate voltage is assumed.

APPLICATION

MECHANICAL

Mounting—The 3CW20,000A7 must be operated vertically, base down or up. The tube must be protected from severe vibration and shock.

Socket—The SK-1300 socket is available for use with the 3CW20,000A7. Base cooling is accomplished by directing approximately 30 cfm of air at a static pressure of 0.1 inch through the socket and over the base seals.

Cooling—The anode of the 3CW20,000A7 is cooled by circulating water through the integral anode-water jacket. The table below lists minimum water-flow rates at various plate dissipation levels

Minimum Cooling Water-Flow Requirements		
Plate Dissipation (kW))	Water Flow (gpm)	Pressure Drop (psi)
10	6.3	4.9
15	9.0	9.2
20	12.0	15.0

*Since power dissipated by the filament represents 750 watts and grid dissipation can reach 500 watts, 1250 watts has been added to anode dissipation in preparing this tabulation.

The cooling table assumes that the maximum outlet-water temperature will be below 70°C to preclude "spot" boiling. Further, inlet-water temperature must not exceed 60°C. In all cases, maximum system water pressure must not exceed 50 pounds per square inch. Water flow and air flow must be started before applying any voltages to the tube and may be stopped simultaneously with the removal of tube voltages. Suitable flow and temperature interlocks should be provided to protect the tube from inadequate flow rates.

ELECTRICAL

Filament—The rated filament voltage for the 3CW20,-000A7 is 7.5 volts Filament voltage, as measured at the socket, should be maintained at this value for consistent performance and maximum tube life. In no case should it be allowed to vary from 7.5 volts by more than plus or minus five percent.

Input Circuit—When the 3CW20,000A7 is operated as a grounded-grid rf amplifier, the use of a resonant tank line in the cathode circuit is recommended in order to obtain greatest linearity and power output. For best results with a single-ended amplifier, it is suggested that the cathode tank circuit operate at a "Q" of two or more.

Class-C Operation—Although designed specifically for Class-B service, the 3CW20,000A7 may be operated as a Class-C amplifier or oscillator or as a plate-modulated radio-frequency amplifier. The zero-bias characteristic can be used to advantage in Class-C amplifiers by employing only grid leak bias. If driving power should fail, plate dissipation is then kept to a low value because the tube will be operating at normal, static, zero-bias conditions.

Special Applications—If it is desired to operate this tube under conditions widely different from those given here, write to Power Grid Tube Marketing, Eitel-McCullough, Inc., 301 Industrial Way, San Carlos, California, for information and recommendations.

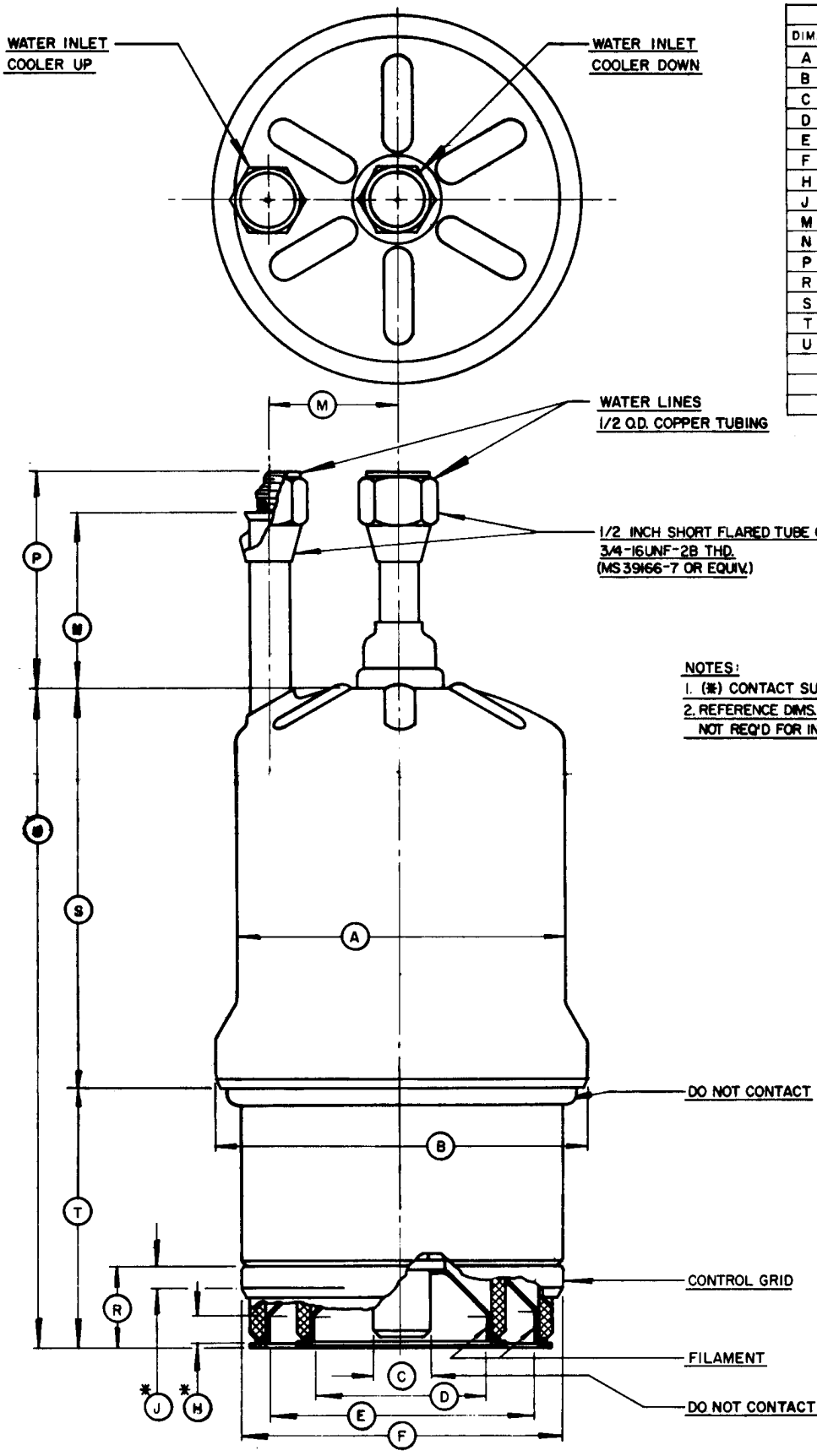

DIMENSIONS IN INCHES

DIMENSIONAL DATA			
DIM.	MIN.	MAX.	REF.
A	4.094	4.156	
B	4.594	4.656	
C	.720	.760	
D	1.896	1.936	
E	3.133	3.173	
F	3.792	3.832	
H	.188		
J	.188		
M	1.500	1.750	
N	1.937	2.187	
P	2.312	2.812	
R	.986	1.050	
S	4.780	5.025	
T	3.128	3.428	
U	7.903	8.403	

NOTES:
1. (*) CONTACT SURFACE
2. REFERENCE DIMS. ARE FOR INFO. ONLY & ARE NOT REQ'D FOR INSPECTION PURPOSES.

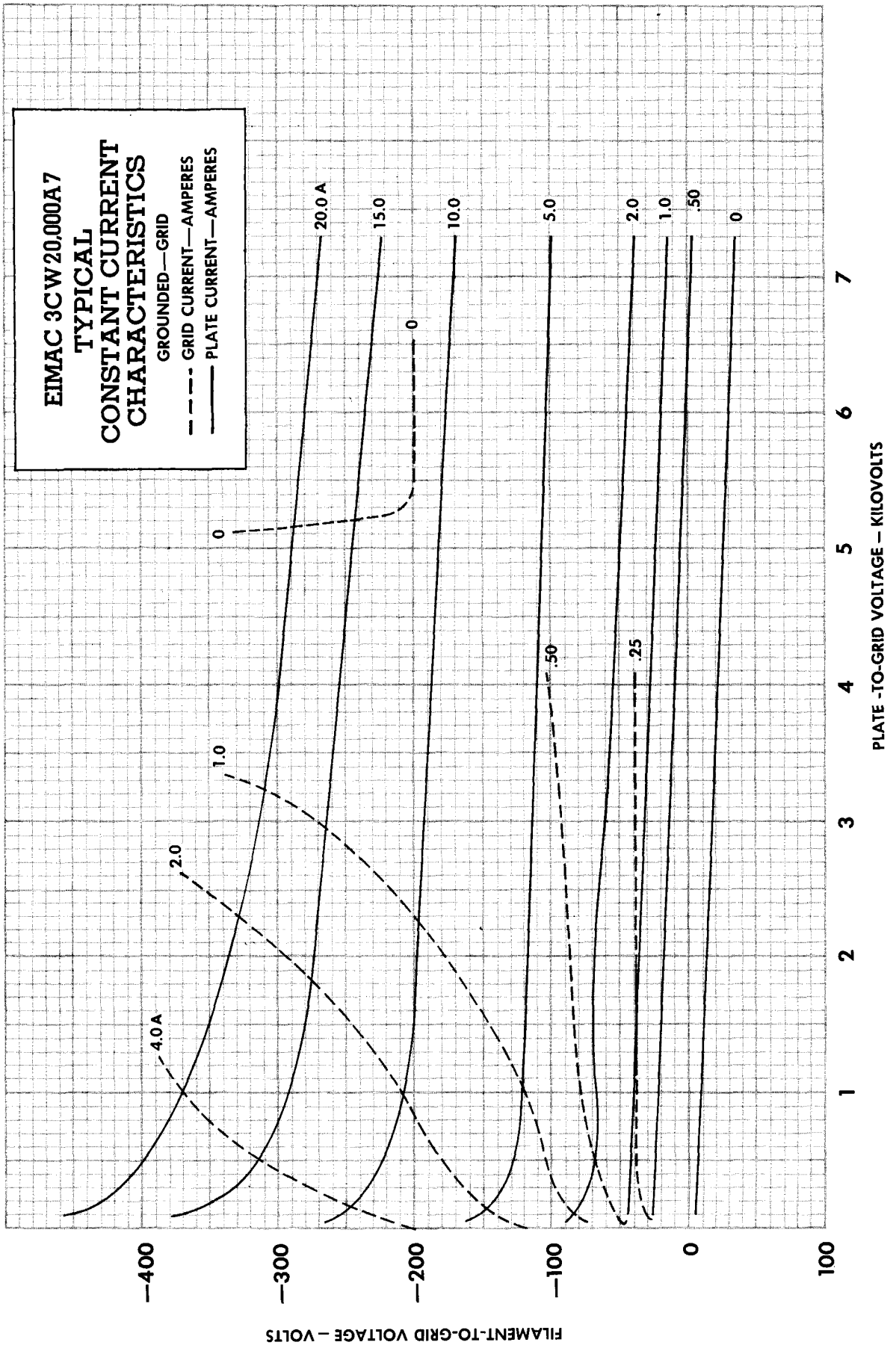
EIMAC 3CW20,000A7
TYPICAL
CONSTANT CURRENT
CHARACTERISTICS
GROUNDED—GRID
GRID CURRENT—AMPERES
PLATE CURRENT—AMPERES
20.0 A
15.0
10.0
5.0
2.0
1.0
.50
0
0
1.0
2.0
4.0 A
.50
.25
1
2
3
4
5
6
7
PLATE -TO-GRID VOLTAGE – KILOVOLTS
−400
−300
−200
−100
0
100
FILAMENT-TO-GRID VOLTAGE – VOLTS

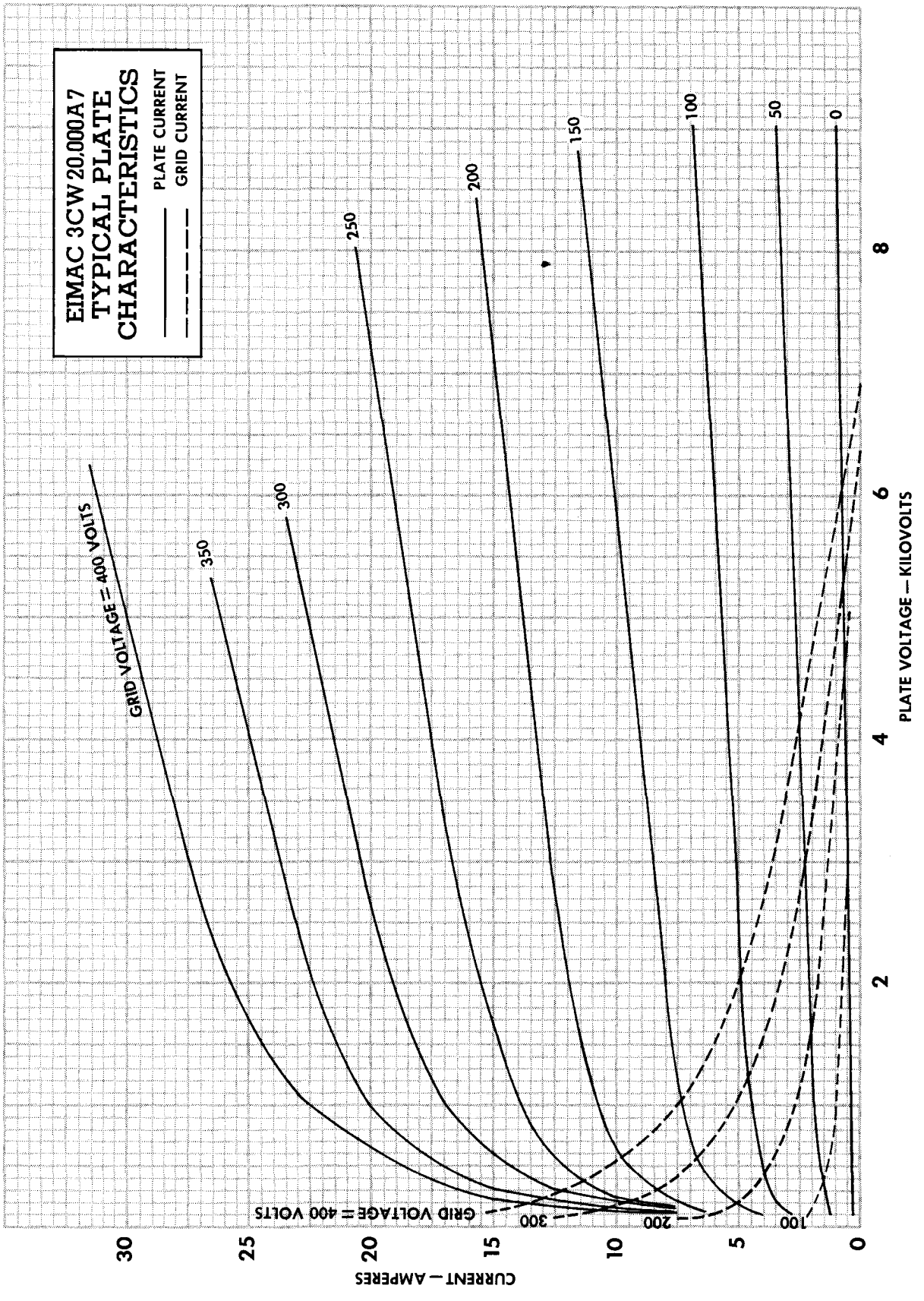
EIMAC 3CW 20,000A7
TYPICAL PLATE
CHARACTERISTICS
PLATE CURRENT
GRID CURRENT
GRID VOLTAGE = 400 VOLTS
350
300
250
200
150
100
50
0
GRID VOLTAGE = 400 VOLTS
300
200
100
CURRENT — AMPERES
30
25
20
15
10
5
0
2
4
6
8
PLATE VOLTAGE — KILOVOLTS