TECHNICAL DATA

WATER-COOLED
LOW-MU
POWER TRIODE

The EIMAC 3CW20,000A1 is a ceramic/metal power triode intended primarily for use as an audio amplifier or modulator. This tube is also recommended for voltage-regulator applications where high current capability and low tube drop are important. Up to 20 kilowatts of plate power can be dissipated on its water-cooled anode. Except for plate dissipation, the tube is electrically identical to the 8158/3CX10,000A1.

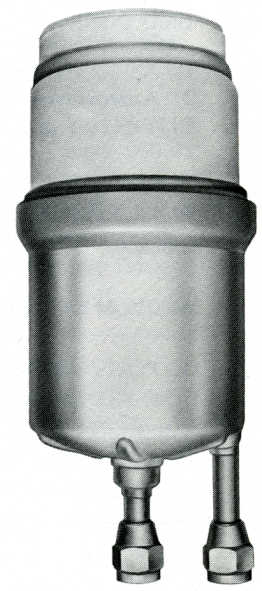

## GENERAL CHARACTERISTICS[1]

### ELECTRICAL

| | |
|---|---|
| Filament: Thoriated-tungsten | |
| Voltage | 7.5 ± 0.37 V |
| Current, at 7.5 volts | 100 A |
| Amplification Factor (average) | 6.2 |
| Direct Interelectrode Capacitances (grounded cathode)[2] | |
| Cin | 51.0 pF |
| Cout | 4.1 pF |
| Cgp | 28.5 pF |
| Transconductance ($I_b$ = 2.0 Adc, $E_b$ = 3000 Vdc) | 20,000 μmhos |
| Frequency of Maximum Rating (CW) | 110 MHz |

1. Characteristics and operating values are based upon performance tests. These figures may change without notice as the result of additional data or product refinement. EIMAC Division of Varian should be consulted before using this information for final equipment design.

2. Capacitance values are for a cold tube as measured in a special shielded fixture in accordance with Electronic Industries Association Standard RS-191.

### MECHANICAL

| | |
|---|---|
| Maximum Overall Dimensions: | |
| Length | 11.22 In; 28.49 cm |
| Diameter | 4.66 In; 11.83 cm |
| Net Weight | 12 lbs; 5.5 kg |
| Operating Position | Vertical, base up or down |
| Maximum Operating Temperature: | |
| Envelope & Ceramic/Metal Seals | 250°C |
| Cooling | Water and Forced Air |
| Base | Coaxial |
| Recommended Socket | EIMAC SK-1300 |

(Effective 9-1-74) © 1963, 1967, 1964 by Varian Printed in U.S.A.

## AUDIO-FREQUENCY AMPLIFIER OR MODULATOR
Class AB1

MAXIMUM RATINGS (Per Tube):

| | | |
|---|---|---|
| DC PLATE VOLTAGE | 7000 | VOLTS |
| DC PLATE CURRENT | 5.0 | AMPERES |
| PLATE DISSIPATION | 20,000 | WATTS |
| GRID DISSIPATION | 100 | WATTS |

1. Adjust for Zero-Signal plate current.
2. Approximate value.

Effective grid circuit resistance must not exceed 20,000 ohms.

TYPICAL OPERATION, Two Tubes
Sinusoidal Wave

| | | | |
|---|---|---|---|
| Plate Voltage | 7000 | 7000 | Vdc |
| Grid Voltage [1] | -1300 | -1300 | Vdc |
| Zero-Sig Plate Current | 1.5 | 1.5 | Adc |
| Max-Sig Plate Current | 5.8 | 7.0 | Adc |
| Load Res. Plate-to-Plate | 2460 | 1720 | Ω |
| Peak af Drive Voltage [2] (per tube) | 1300 | 1300 | v |
| Max-Sig Driving Power | 0 | 0 | W |
| Max-Sig Plate Output Power | 24.4 | 29.1 | kW |
| Total Harmonic Distortion [2] | 2.9 | 3.6 | % |

## AUDIO-FREQUENCY AMPLIFIER OR MODULATOR
Class A

MAXIMUM RATINGS:

| | |
|---|---|
| DC PLATE VOLTAGE | 7000 VOLTS |
| DC PLATE CURRENT | See Class A derating table on P. 3. |
| PLATE DISSIPATION | 20,000 WATTS |
| GRID DISSIPATION | 100 WATTS |

TYPICAL OPERATION

| | | |
|---|---|---|
| Plate Voltage | 2500 | Vdc |
| Grid Voltage [1] | -290 | Vdc |
| Plate Current | 4.0 | Adc |
| Peak af Driving Voltage [2] | 290 | v |
| Load Resistance | 212 | Ω |
| Max. Sig. Plate Output Power [2] | 1800 | W |
| Second Harmonic Distortion [2] | 6.75 | % |

1. Adjust for specified dc plate current.
2. Approximate value.

## VOLTAGE REGULATOR SERVICE
Class A

MAXIMUM RATINGS:

| | |
|---|---|
| DC PLATE VOLTAGE | 10,000 VOLTS |
| DC PLATE CURRENT | See Class A derating table on P. 3. |
| PLATE DISSIPATION | 12,000 WATTS |
| GRID DISSIPATION | 100 WATTS |

TYPICAL OPERATION

| | | |
|---|---|---|
| Plate Voltage (Tube drop) | 5000 | Vdc |
| Plate Current | 0-2.0 | Adc |

(These values are chosen according to the Class A derating table on Page 3).

NOTE: TYPICAL OPERATION data are obtained by measurement or calculation from published characteristic curves. Adjustment of the grid voltage to obtain the specified plate current at the specified bias, and plate voltages, is assumed. If this procedure is followed, there will be little variation in output power when the tube is changed.

## RANGE VALUES FOR EQUIPMENT DESIGN

| | Min. | Max. | |
|---|---|---|---|
| Filament: Current at 7.5 volts | 94.0 | 104.0 | A |
| Amplification Factor | 4.8 | 6.8 | |
| Interelectrode Capacitances (grounded cathode connection) [1] | | | |
| Cin | 45.0 | 57.0 | pF |
| Cout | 3.6 | 4.5 | pF |
| Cgp | 25.0 | 32.0 | pF |

1. Capacitance values are for a cold tube as measured in a special shielded fixture in accordance with Electronic Industries Association Standard RS-191.

# APPLICATIONS

## MECHANICAL

*MOUNTING* - The 3CW20,000A1 must be operated vertically, anode down or up, and should be protected from shock and vibration. The EIMAC SK-1300 socket is available and recommended for simultaneously holding the tube in position and making all base contacts.

*COOLING* - The anode of the 3CW20,000A1 is cooled by circulating water through the integral water jacket. The cooling table shows minimum water-flow rates at various plate dissipation levels and assumes a temperature rise for the water of 10°C. Inlet water temperature should never exceed 55°C and outlet water temperature should never exceed 70°C. Where a liquid coolant other than water is used, the difference in cooling characteristics should be carefully considered and taken into account. Maximum system pressure should not exceed 50 psi.

| Minimum Cooling Water-Flow Requirements | | |
|---|---|---|
| Dissipation (watts) | Water Flow (gpm) | Press. Drop Approx. psi |
| 10,000 | 11 | 11.5 |
| 15,000 | 12 | 13.5 |
| 20,000 | 14 | 17.0 |

A major factor effecting long life of water-cooled tubes is the condition of the cooling water. If the cooling water is ionized, deposits of copper oxide will form on the internal parts of the water jacket and can cause localized heating of the anode and eventual failure of the tube.

A simple method of determining the condition of the water is to measure the resistance across a known volume. The resistance of the water should be maintained above 50 $K\Omega/cm^3$, and preferably above 250 $K\Omega/cm^3$. A relative water resistance check can be made by continuously measuring the leakage current which will bypass a short section of insulating hose column if metal nipples or fittings are used as electrodes.

Forced-air cooling of the base is also required, with 30 to 50 cfm of air at 50°C maximum directed up into and around the base of the tube to cool the filament and grid contact areas.

Both anode and base cooling should be applied before or simultaneously with electrode voltages, including the filament, and should normally be maintained for a short period of time after all voltages are removed to allow for tube cooldown.

## ELECTRICAL

*VOLTAGE REGULATOR OR CLASS A SERVICE* - Maximum dc plate curren' and voltage are restricted according to the following table:

| CLASS A DERATING TABLE | |
|---|---|
| DC Plate Voltage (Volts) | Max. DC Plate Current (mA) |
| 0 - 2400 | 5000 |
| 3000 | 4000 |
| 4000 | 3000 |
| 5000 | 2000 |
| 6000 | 1500 |
| 7000 | 1000 |
| 8000 | 700 |
| 9000 | 500 |
| 10,000 | 350 |

*FILAMENT OPERATION* - Filament voltage should be measured at the socket with a one percent accuracy, rms responding meter. The peak emission capability of the tube at rated filament voltage is normally many times that required for for communication or regulator service, and a small decrease in filament temperature due to a reduction in filament voltage can increase the life of the tube by a substantial percentage. It is good practice to determine the nominal filament voltage for a particular application that will not adversely affect the equipment operation. This is done by measuring some important parameter of performance, such as plate current or power output, while filament voltage is slowly reduced. At some point in filament voltage there will be a noticeable reduction in plate current or power output, and operation must be at a filament volt-

age slightly higher than the point at which performance appeared to deteriorate. This point should be periodically checked to maintain proper operation, and line or filament voltage regulation must be such that this procedure for operating at slightly reduced voltage is feasible.

*STANDBY OPERATION* - Both anode and base cooling must be applied whenever filament power is applied even though no other voltages are present, since sixty to eighty percent of the filament power appears as heat at the anode. In the absence of cooling, temperatures will rise to levels which are detrimental to long life, and if the anode coolant lines are obstructed the cooling jacket may rupture from generated steam pressure.

*HIGH VOLTAGE* - Normal operating voltages used with the 3CW20,000A1 are deadly, and the equipment must be designed properly and operating precautions must be followed. Design all equipment so that no one can come in contact with high voltages. All equipment must include safety enclosures for high-voltage circuits and terminals, with interlock switches to open primary circuits of the power supply and to discharge high-voltage condensers whenever access doors are opened. Interlock switches must not be bypassed or "cheated" to allow operation with access doors open. Always remember that HIGH VOLTAGE CAN KILL.

*RADIO FREQUENCY RADIATION* - Avoid exposure to strong rf fields even at relatively low frequency. Absorption of rf energy by human tissue is dependent on frequency. Under 30 MHz, most of the energy will pass completely through the human body with little attenuation or heating effect. Public health agencies are concerned with the hazard, however, even at these frequencies, and it is worth noting that some commercial dielectric heating units actually operate at frequencies as low as the 13 and 27 MHz bands.

Many EIMAC power tubes, such as the 3CW-20,000A1, are specifically designed to generate or amplify radio frequency power. There may be a relatively strong rf field in the general proximity of the power tube and its associated circuitry --- the more power involved, the stronger the rf field. Proper enclosure design and efficient coupling of rf energy to the load will minimize the rf field in the vicinity of the power amplifier unit itself.

*INTERELECTRODE CAPACITANCE* - The actual internal interelectrode capacitance of a tube is influenced by many variables in most applications, such as stray capacitance to the chassis, capacitance added by the socket used, stray capacitance between tube terminals, and wiring effects. To control the actual capacitance values within the tube, as the key component involved, the industry and the Military Services use a standard test procedure as described in Electronic Industries Association Standard RS-191. This requires the use of specially constructed test fixtures which effectively shield all external tube leads from each other and eliminates any capacitance reading to "ground". The test is performed on a cold tube. Other factors being equal, controlling internal tube capacitance in this way normally assures good interchangeability of tubes over a period of time, even when the tube may be made by different manufacturers. The capacitance values shown in the manufacturer's technical data, or test specifications, normally are taken in accordance with Standard RS-191.

The equipment designer is therefore cautioned to make allowance for the actual capacitance values which will exist in any normal application. Measurements should be taken with the socket and mounting which represent approximate final layout if capacitance values are highly significant in the design.

*SPECIAL APPLICATIONS* - If it is desired to operate this tube under conditions widely different from those given here, write to the Application Engineering Dept., Power Grid Tube Division, EIMAC Division of Varian, 301 Industrial Way, San Carlos, California, 94070 for information and recommendations.

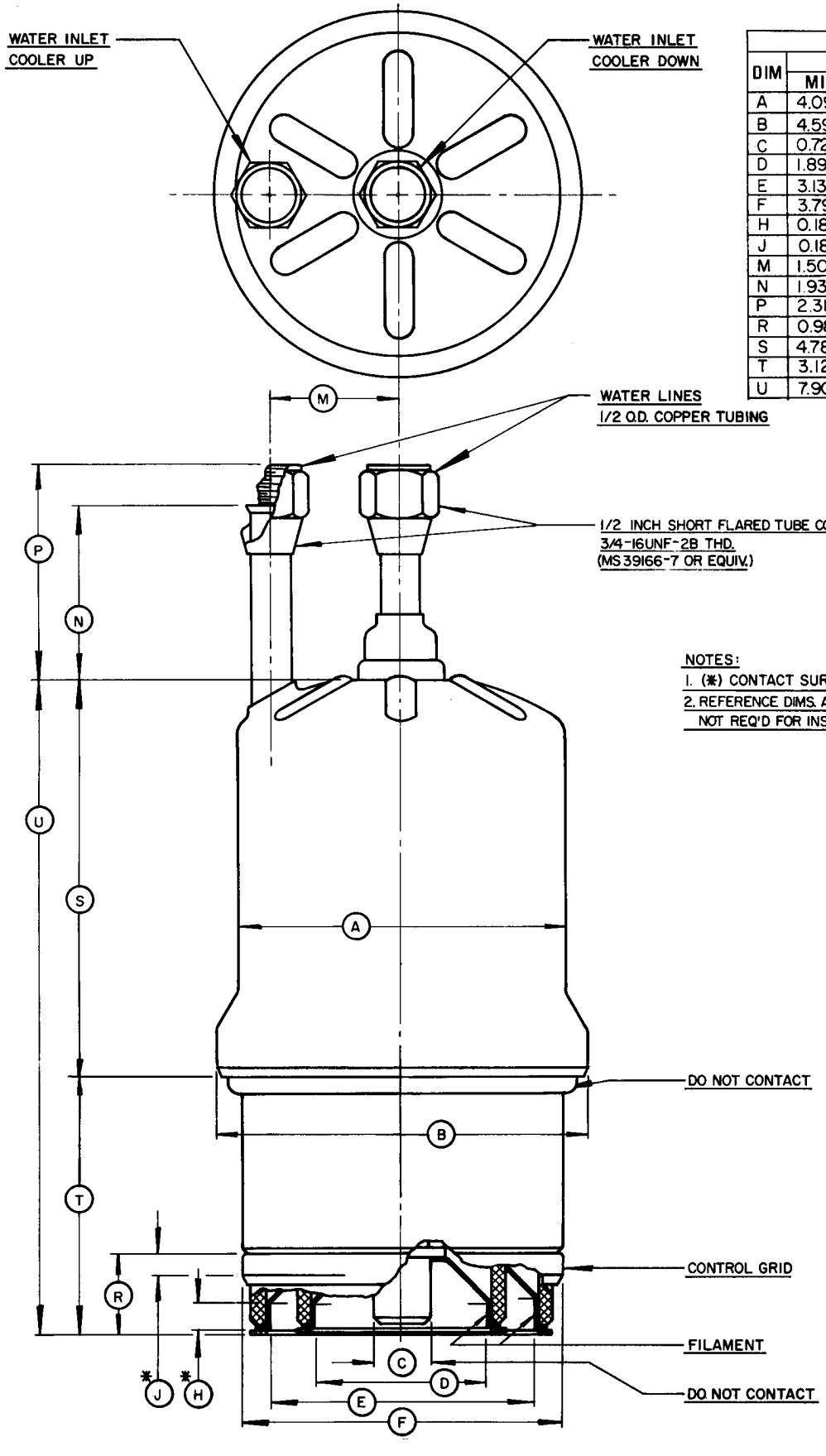


| DIMENSIONAL DATA | | | | | | |
|---|---|---|---|---|---|---|
| DIM | INCHES | | | MILLIMETERS | | |
| | MIN. | MAX. | REF. | MIN. | MAX. | REF. |
| A | 4.094 | 4.156 | - - | 103.99 | 105.56 | - - |
| B | 4.594 | 4.656 | - - | 116.69 | 118.26 | - - |
| C | 0.720 | 0.760 | - - | 18.29 | 19.30 | - - |
| D | 1.896 | 1.936 | - - | 48.16 | 49.17 | - - |
| E | 3.133 | 3.173 | - - | 79.58 | 80.59 | - - |
| F | 3.792 | 3.832 | - - | 96.32 | 97.33 | - - |
| H | 0.188 | - - | - - | 4.78 | - - | - - |
| J | 0.188 | - - | - - | 4.78 | - - | - - |
| M | 1.500 | 1.750 | - - | 38.10 | 44.45 | - - |
| N | 1.937 | 2.187 | - - | 49.20 | 55.55 | - - |
| P | 2.312 | 2.812 | - - | 58.72 | 71.42 | - - |
| R | 0.986 | 1.050 | - - | 25.04 | 26.67 | - - |
| S | 4.780 | 5.025 | - - | 121.41 | 127.64 | - - |
| T | 3.128 | 3.428 | - - | 79.45 | 87.07 | - - |
| U | 7.903 | 8.403 | - - | 200.74 | 213.44 | - - |

NOTES:
1. (*) CONTACT SURFACE
2. REFERENCE DIMS. ARE FOR INFO. ONLY & ARE NOT REQ'D FOR INSPECTION PURPOSES.

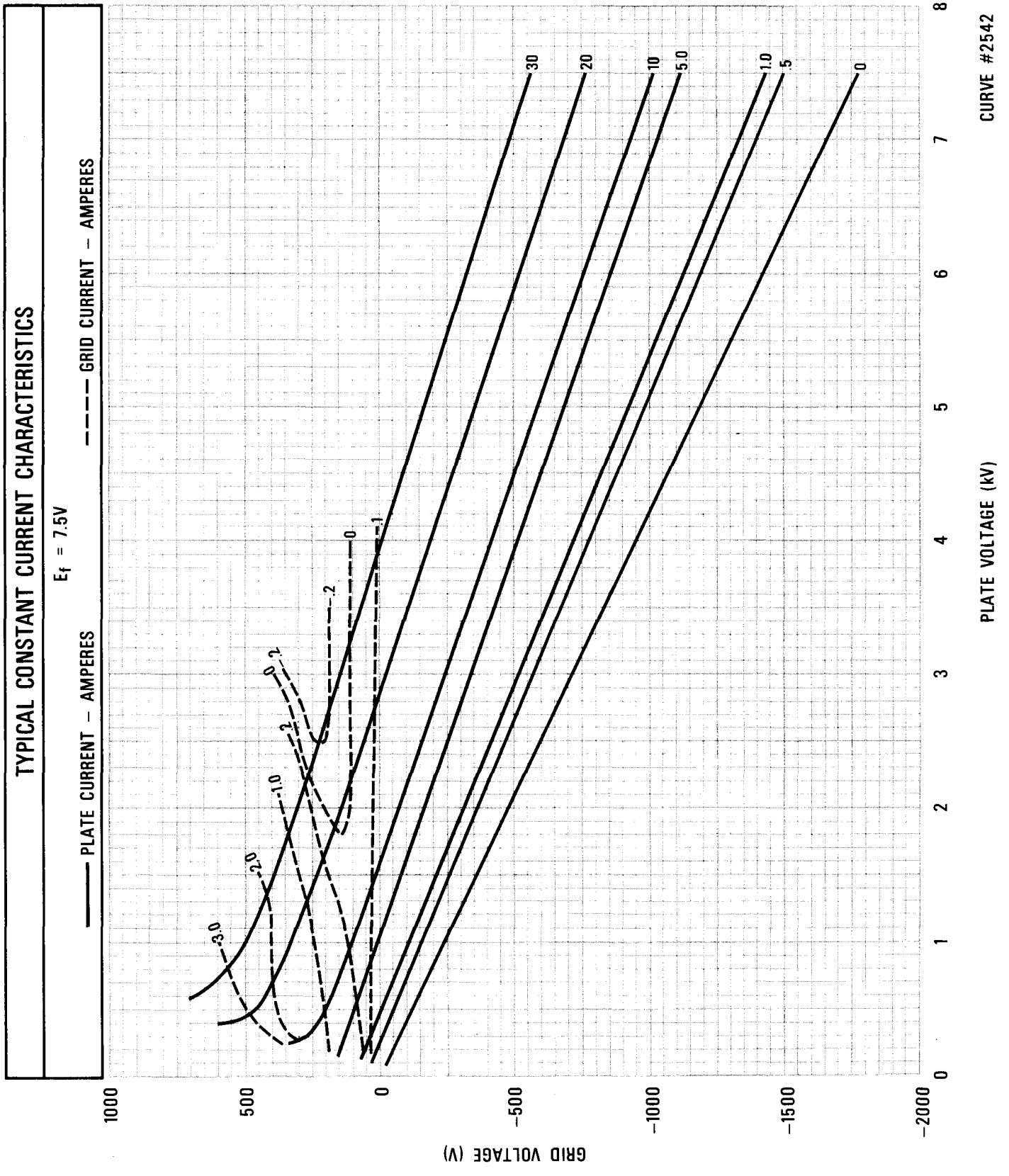
TYPICAL CONSTANT CURRENT CHARACTERISTICS
$E_f$ = 7.5V
PLATE CURRENT – AMPERES
GRID CURRENT – AMPERES
GRID VOLTAGE (V)
PLATE VOLTAGE (kV)
CURVE #2542
1000
500
0
-500
-1000
-1500
-2000
0
1
2
3
4
5
6
7
8
30
20
10
5.0
1.0
.5
0
-3.0
-2.0
-1.0
-.2
0
.2
.1

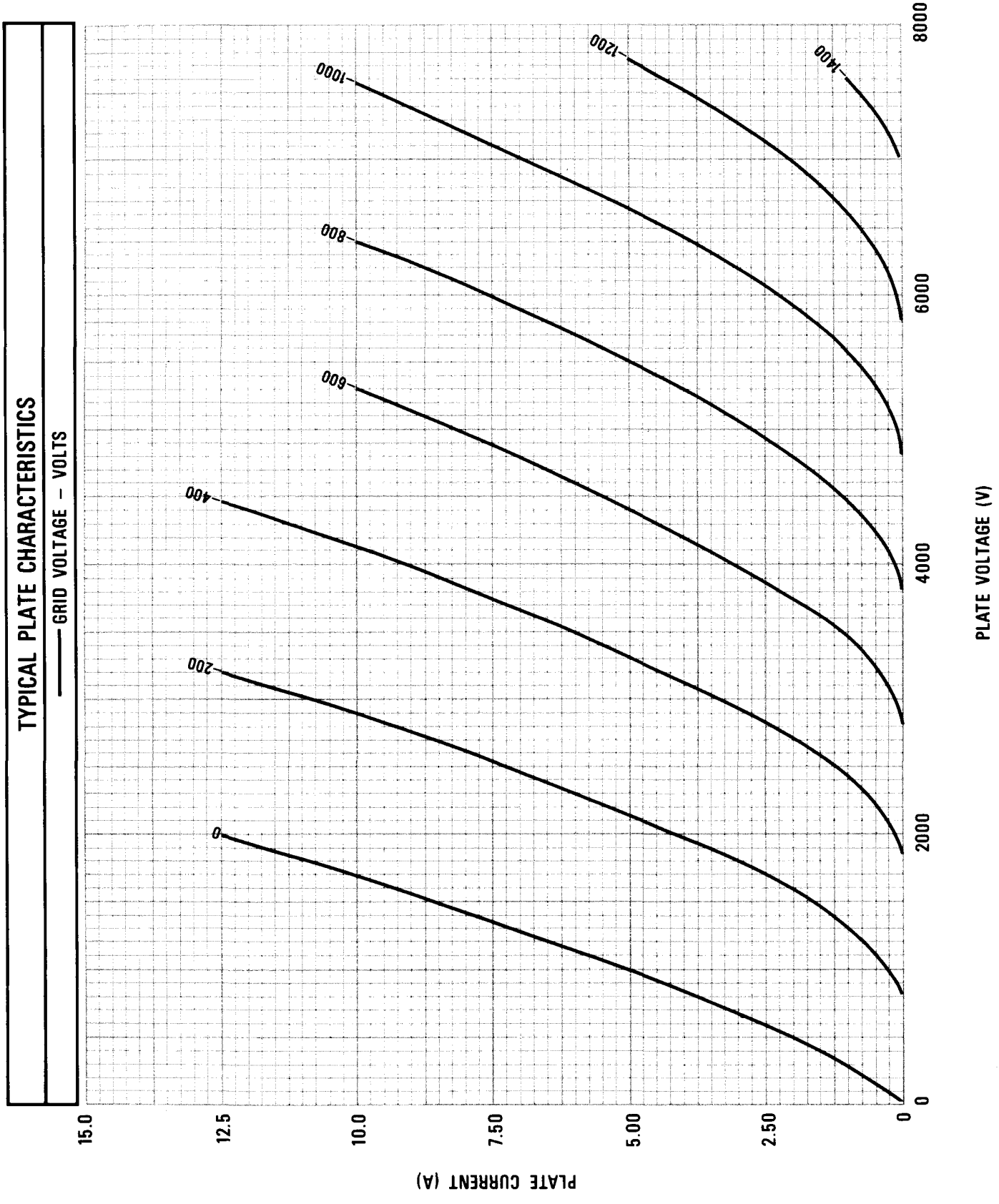
TYPICAL PLATE CHARACTERISTICS
GRID VOLTAGE – VOLTS
0
200
400
600
800
1000
1200
1400
15.0
12.5
10.0
7.50
5.00
2.50
0
PLATE CURRENT (A)
0
2000
4000
6000
8000
PLATE VOLTAGE (V)