EIMAC
Division of Varian
SAN CARLOS
CALIFORNIA

3CV30,000H3

MEDIUM-MU VAPOR-COOLED POWER TRIODE

The EIMAC 3CV30,000H3 is a vapor-cooled, ceramic-metal power triode designed primarily for use in industrial radio-frequency heating service. Its vapor-cooled anode is conservatively rated at 30 kilowatts of plate dissipation when mounted in an EIMAC BR-200 boiler.

Full input of 60 kilowatts is permissible up to 100 megahertz. Large reserve emission is available from its one kilowatt filament and the grid structure is rated at one ampere making this tube an excellent choice for severe applications.

It is also recommended as an audio amplifier, a conventional plate-modulated amplifier or as a linear amplifier in new equipment designs.

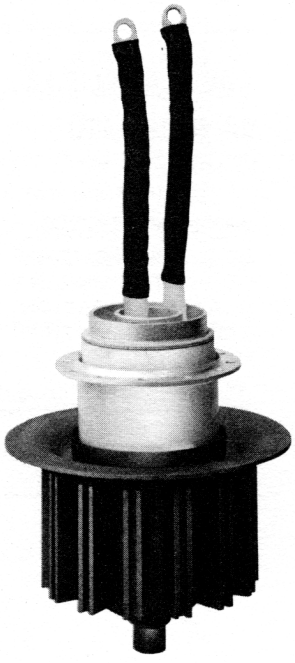

GENERAL CHARACTERISTICS

ELECTRICAL

	Min.	*Nom.*	*Max.*	
Filament: Thoriated-Tungsten				
Voltage		6.3		V
Current	152		172	A
Amplification Factor		20		
Interelectrode Capacitances, Grounded Cathode:				
Grid-Filament	48		58	pF
Plate-Filament	1.2		1.5	pF
Grid-Plate	30		38	pF
Frequency for Maximum Ratings			100	MHz

MECHANICAL

Filament Connections	Flexible Leads
Grid Connection	Terminal Ring
Recommended Boiler	EIMAC BR-200
Operating Position	Vertical, Base up
Cooling	Vapor and Forced air
Maximum Operating Temperatures:	
Ceramic-to-metal Seals	250°C
Maximum Dimensions:	See Outline
Net Weight	18 pounds

RF INDUSTRIAL OSCILLATOR

Class-C (Filtered DC Power Supply)

MAXIMUM RATINGS

DC PLATE VOLTAGE	10,000	VOLTS
DC PLATE CURRENT	6.0	AMPS
DC GRID CURRENT	1.0	AMPS
PLATE INPUT POWER	60	KW
PLATE DISSIPATION	30	KW

TYPICAL OPERATION

DC Plate Voltage	7000	10,000	volts
DC Plate Current	6.0	6.0	amps
DC Grid Voltage	-600	-800	volts
DC Grid Current	.66	.315	amps
Peak Positive Grid Voltage	440	360	volts
Driving Power	660	365	watts
Plate Input Power	42	60	kW
Plate Dissipation	12	18	kW
Plate Output Power	30	42	kW
Approximate Load Impedance	600	750	ohms

 © 1968 Varian Printed in U.S.A.

RADIO-FREQUENCY POWER AMPLIFIER

PLATE-MODULATED

Class-C

MAXIMUM RATINGS

DC PLATE VOLTAGE	7000	VOLTS
DC PLATE CURRENT	5.0	AMPS
PLATE DISSIPATION	20	KW
GRID DISSIPATION	500	WATTS

TYPICAL OPERATION

DC Plate Voltage	5000	7000	volts
DC Grid Voltage	-600	-820	volts
DC Plate Current	5.0	5.0	amps
DC Grid Current	600	600	mA
Driving Power	600	750	watts
Plate Output Power	17.8	27.5	kW

AUDIO AMPLIFIER

OR MODULATOR

Class-AB_2

MAXIMUM RATINGS

DC PLATE VOLTAGE	10,000	VOLTS
DC PLATE CURRENT	6.0	AMPS
PLATE DISSIPATION	30	KW
GRID DISSIPATION	500	WATTS

TYPICAL OPERATION (two tubes)

DC Plate Voltage	6000	9600	volts
DC Grid Voltage*	-280	-480	volts
Zero-Sig Plate Current	.5	.25	amps
Max-Sig DC Plate Current	4.2	3.1	amps
Max-Sig DC Grid Current	145	42	mA
Peak Driving Voltage	480	590	volts
Drive Power	140	50	watts
Plate-to-Plate Load Resistance	1300	2740	ohms
Power Output	31	36	kW

Note: "TYPICAL OPERATION" data are obtained by calculation from published characteristic curves. No allowance for circuit losses has been made.

APPLICATION

ELECTRICAL

Filament The rated filament voltage for the 3CV30,000H3 is 6.3 volts. Filament voltage, as measured at the socket, must be maintained at 6.3 volts plus or minus five percent for maximum tube life and consistent performance.

Control Grid Operation The grid current rating is one ampere dc. This value should not be exceeded for more than very short periods such as during tuning and over-current protection in the grid circuit should be provided. Ordinarily it will not be necessary to operate with more than 0.4 to 0.6 amperes grid current to obtain reasonable efficiency. In industrial heating service with varying loads, grid current should be monitored continuously with a dc current meter. The maximum grid dissipation rating is 500 watts.

Plate Operation The maximum plate input power rating is 60 kilowatts at 10,000 volts and 6.0 amperes dc. This rating applies for Class C amplifier or oscillator service and for Class AB applications. When used as a plate modulated rf amplifier, input is reduced to 7000 volts at 5.0 amperes dc. Maximum input may be exceeded for short periods during tuning without exceeding plate dissipation ratings.

Plate over-current protection should be provided to remove plate voltage quickly in the event of an overload or an arc-over at the load. In addition, current limiting power supply resistors should be used. These precautions are especially important in industrial service with its wide variations in loading.

Spark gaps from plate to ground should be used to prevent transient voltages from flashing across the tube envelope during any fault conditions.

Special Application If it is desired to operate this tube under conditions widely different from those given here, write to Power Grid Tube Division, EIMAC Division of Varian, 301 Industrial Way, San Carlos, California, for information and recommendations.

MECHANICAL

Mounting The 3CV30,000H3 must be mounted vertically, base up in an EIMAC BR-200 boiler. It is very important that the boiler tube assembly be mounted vertically, the water be maintained at the suggested level, and that the flange of the tube makes a vapor-tight seal against the rubber "O" ring and boiler.

Cooling Cooling is accomplished by immersion of the anode in a distilled water-filled BR-200 boiler. The energy dissipated at the anode causes the water to boil and be converted into steam. Steam is carried away by convection to the condenser where it is cooled and condenses into water. Condensate is then returned to the boiler.

The boiling action maintains the anode surface temperature at approximately 100°C. In a properly designed system (such as the 3CV30,000H3 and BR-200) it is unlikely that anode surface temperature will ever exceed 125°C — well below the rated maximum for the tube — even at full plate dissipation levels.

The water in the boiler must be maintained at a constant level, just below the top of the anode fins. This level is marked on the boiler. A recommended system for assuring constant water level is shown in the system diagram below. This system incorporates an EIMAC CB-202 Control Box to sense water level and a small reservoir to supply make-up water on demand. In the event of a drop in system water level, a switch is closed in the control box, energizing a solenoid water valve in the line from the reservoir. When the make-up water brings the system back to the proper level, the switch is opened, de-energizing the solenoid valve. A second switch in the CB-202 Control Box senses a lower, danger level and can be used to actuate an alarm or shut down the system.

For reliable operation, it is essential that the Control Box be mounted so that the level sensed is the actual level in the boiler.

Separate cooling of the tube base is required and is accomplished by directing 100 CFM of cooling air into the base structure from the top of the socket.

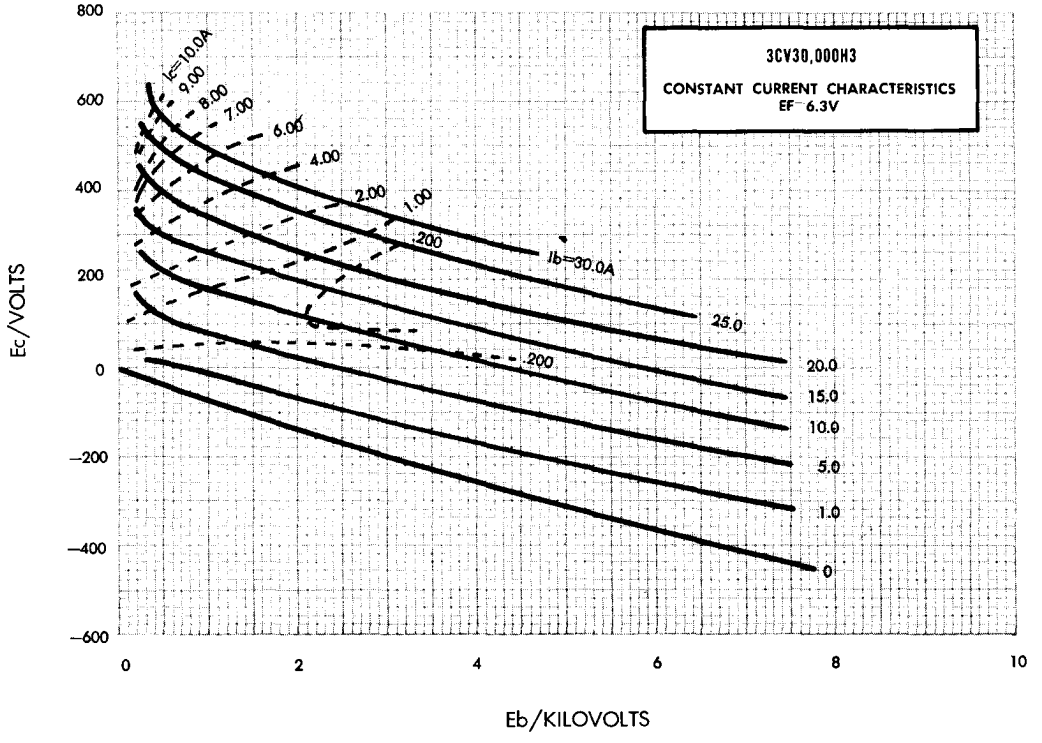

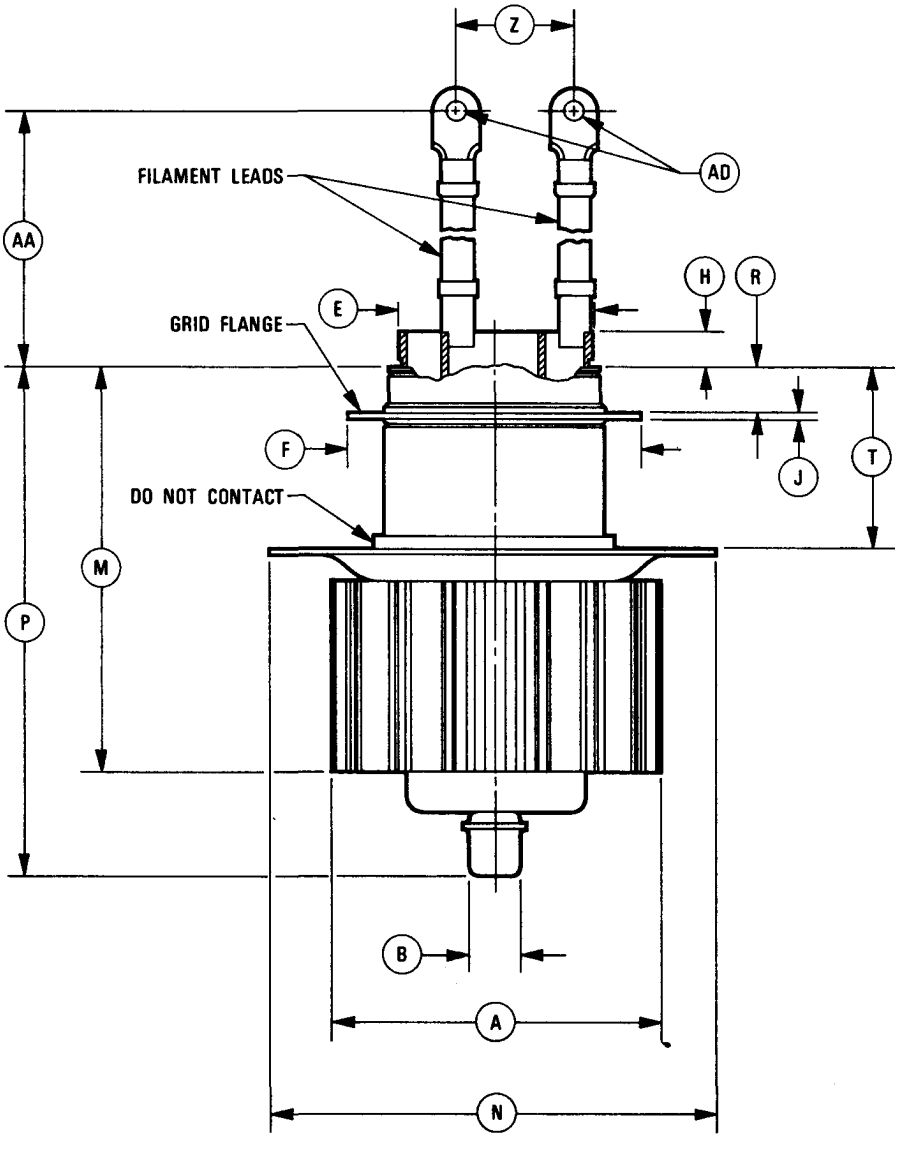

DIMENSIONS IN INCHES

DIMENSIONAL DATA			
DIM.	MIN.	MAX.	REF.
A			5.812
B	.855	.895	
E	3.230	3.270	
F	5.030	5.090	
H	.530	.700	
J			.125
M	6.643	6.775	
N			7.750
P	8.400	8.625	
R	.700	.860	
S			.510
T			2.806
V			.265
Z			2.000
AA	8.500	9.000	
AD			.390
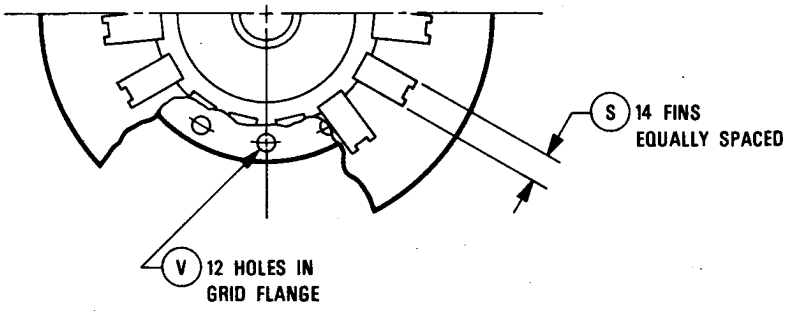
NOTE:
REF. DIMS. ARE FOR INFO. ONLY & ARE NOT REQ'D. FOR INSP. PURPOSES.