MECHANICAL DATA

Bulb	T-12
Base	B8-110 Short Medium Shell Octal. 8-Pin
Cap	C1-1 Small
Outline	See Drawing
Basing[1]	8FV
Cathode	Coated Filament
Mounting Position	Any

ELECTRICAL DATA

HEATER CHARACTERISTICS

	Series	Parallel	
Filament Voltage[2]	3.15	1.58	Volts
Filament Current	0.21	0.42	Ampere

DIRECT INTERELECTRODE CAPACITANCES (approx.) Unshielded

Plate to Filament	1.4	$\mu\mu f$

RATINGS (Design Maximum Values) [3 & 4]

Peak Inverse Plate Voltage		
DC component	28000	Volts
Total DC and Peak	33000	Volts
Steady State Peak Plate Current	80	Ma
DC Output Current	1.1	Ma

AVERAGE CHARACTERISTICS

Tube Voltage Drop (approx.) for $I_b = 7.0$ Ma	62	Volts

NOTES:

1. *Pins 1 and 3 may be used as tie points for the filament dropping resistance or may be connected to the filament. Do not connect to any other circuit.*
2. *Filament voltage for parallel operation should never be less than 1.4 volts or more than 1.8 volts; for series operation voltage should never be less than 2.7 volts or more than 3.6 volts.*
3. *For operation in 525 line, 30 frame system as described in "Standards of Good Engineering Practice for Television Broadcast Stations; Federal Communications Commission", the duty cycle of the voltage pulse must not exceed 15% of one horizontal scanning cycle.*
4. *Design-Maximum Ratings are the limiting values, expressed with respect to bogie tubes, at which satisfactory tube life can be expected to occur. In order to obtain satisfactory circuit performance, therefore, the equipment designer must establish the circuit design so that no design-maximum value is exceeded with a bogie tube under the worst probable operating conditions with respect to the combined effect of supply-voltage variation, equipment component variation, equipment control adjustment, load variation, and any other variation associated with the equipment or the environment of the equipment.*

WARNING:

X-Ray radiation shielding may be necessary to protect against possible danger of personal injury from prolonged exposure at close range if this tube is operated at higher than the manufacturer's maximum Rated Anode Voltage or 16,000 volts whichever is less.

QUICK REFERENCE DATA

The Sylvania Type 3C2 is a half-wave rectifier in a T-12 envelope. It is designed primarily for service as a high voltage rectifier in color television receivers.

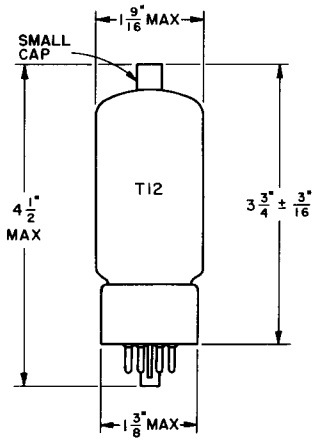

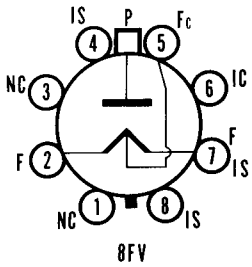

SYLVANIA ELECTRIC PRODUCTS INC.

RADIO TUBE DIVISION
EMPORIUM, PA.

Prepared and Released By The
TECHNICAL PUBLICATIONS SECTION
EMPORIUM, PENNSYLVANIA

JULY 1956
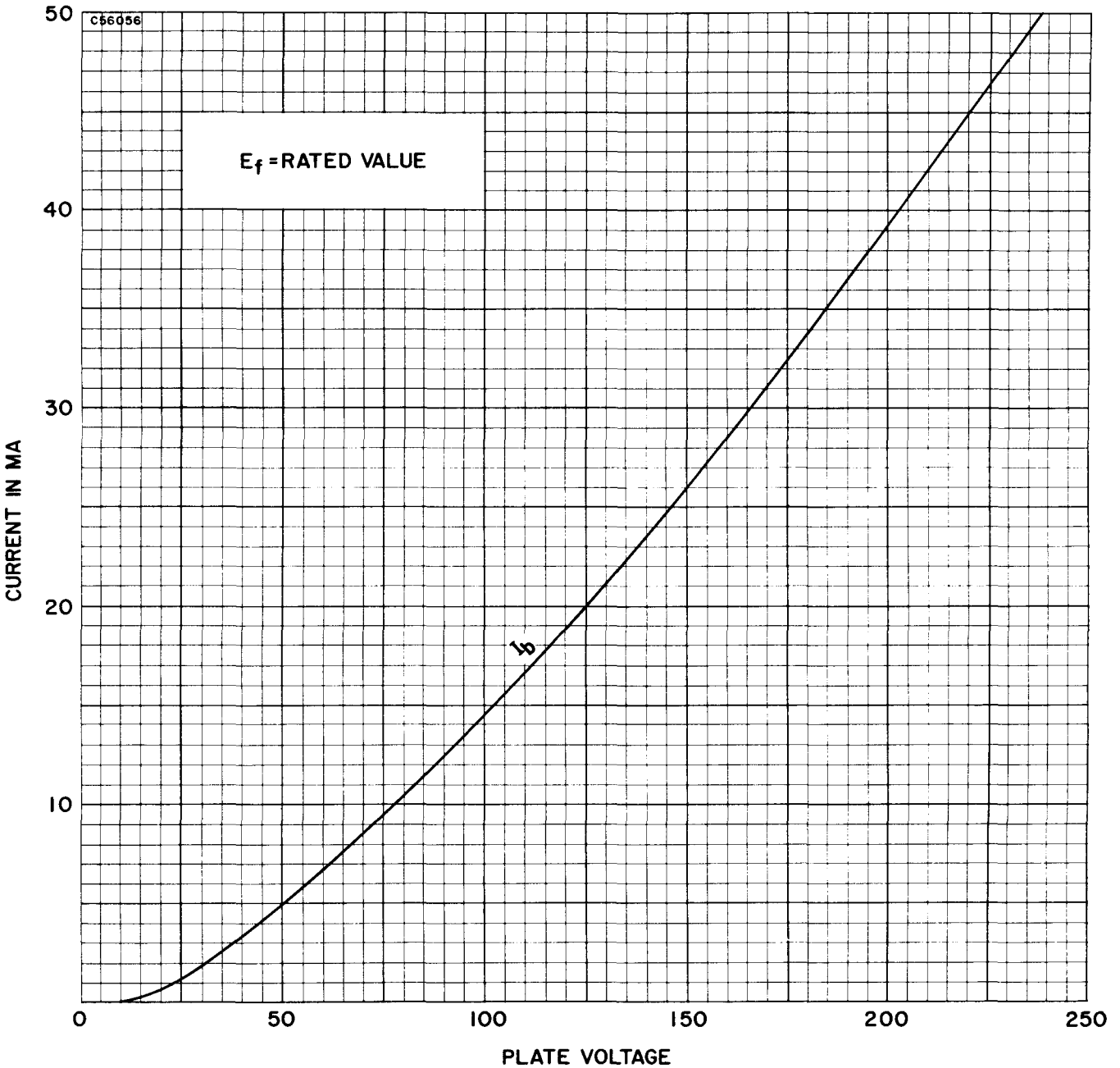
AVERAGE PLATE CHARACTERISTICS