from JEDEC release #3093,
Jan. 2, 1961

DUMONT

TYPE 3BQP-

The Du Mont Type 3BQP- is a 3 x 1 1/2-inch, rectangular face, electrostatic deflection and focus cathode-ray tube, designed for small, light weight oscillograph applications. It features a flat face-plate with uniform glass surface to reduce errors from parallax. A newly-designed gun structure is used for greater rigidity and improved electrical stability. Nine color-coded leads in axial position, encapsulated, are provided for connecting tube elements.

GENERAL CHARACTERISTICS

Electrical Data

Focusing Method	Electrostatic	
Deflecting Method	Electrostatic	
Direct Interelectrode Capacitances, Approximate		
Grid No. 1 to all other electrodes	9	μμf
D1 to D2	4	μμf
D3 to D4	4	μμf
D1 to all other electrodes	12.5	μμf
D2 to all other electrodes	12.5	μμf
D3 to all other electrodes	11.5	μμf
D4 to all other electrodes	11.5	μμf

Optical Data

Phosphor Number	1	2	5	7	11
Fluorescence	Green	Blue-Green	Blue	Blue-White	Blue
Phosphorescence	-----	Green	----	Yellow	----
Persistence	Medium	Long	Short	Long	Short

Faceplate: Clear

Mechanical Data

Overall Length	8 15/16 ± 1/4	Inches
Greatest Dimensions of Bulb:		
Width	3.016 ± .031	Inches
Height	1.516	Max. Inches
Minimum Useful Screen Dimensions:		
Horizontal	2.750	Inches
Vertical	1.125	Inches

Base: Encapsulated, Octal (B8-11) Base Shell

DE-5633 - 3
10/18/60

Allen B. Du Mont Laboratories, ~~Inc.~~
Divisions of Fairchild Camera and Instrument Corp.
Clifton, New Jersey

DUMONT

TYPE 3BQP-

GENERAL CHARACTERISTICS (Mechanical Data) (Continued)

Trace Alignment:		
D1D2 trace aligns with bulb wall	± 1	Degrees
Angle between D1D2 and D3D4 traces	90 ± 1	Degrees

MAXIMUM RATINGS (Design Maximum Values)

Heater Voltage	6.3	Volts
Heater Current at 6.3 Volts	0.6 ± 10%	Ampere
Accelerator Voltage	3,000	Max. Volts DC
Accelerator Input	6	Max. Watts
Focusing Electrode Voltage	1,200	Max. Volts DC
Grid No. 1 Voltage:		
Negative Bias Value	125	Max. Volts DC
Positive Bias Value	0	Max. Volts DC
Positive Peak Value	2	Max. Volts
Peak Voltage between accelerator and any deflection electrode	550	Max. Volts

TYPICAL OPERATING CONDITIONS

Accelerator Voltage	1,000	2,000	Volts DC
Focusing Electrode Voltage	200 to 350	400 to 700	Volts DC
Grid No. 1 Voltage [1]	-14.5 to -33.5	-28.5 to -67.5	Volts DC
Deflection Factors:			
D1D2	34 to 46	68 to 92	VDC/Inch
D3D4	14 to 19	28 to 38	VDC/Inch
Focusing Electrode Current for any operating condition		-15 to +10	μADC
Spot Position [2]		Within a 7-mm Radius Circle	

MAXIMUM CIRCUIT VALUES

Grid No. 1 Circuit Resistance	1.5	Max. Megohms
Resistance in any Deflection-Electrode Circuit [3]	1.0	Max. Megohms

DUMONT

TYPE 3BQP-

NOTES

1. Visual extinction of the undeflected, focused spot.

2. When the tube is operated at typical operating conditions, with Ec1 adjusted to avoid damage to the screen, and with each of the deflection electrodes connected to the accelerator, and the tube shielded against external influences, the spot will fall within a 7-mm radius circle, centered with respect to the tube face center.

3. It is recommended that the deflection-electrode circuit resistances be approximately equal.

Allen B. Du Mont Laboratories, ~~Inc~~
Divisions of Fairchild Camera and Instrument Corp.
Clifton, New Jersey

FORM 809 5C 4-60-SH

DU MONT

CATHODE RAY TUBE

3BQP-

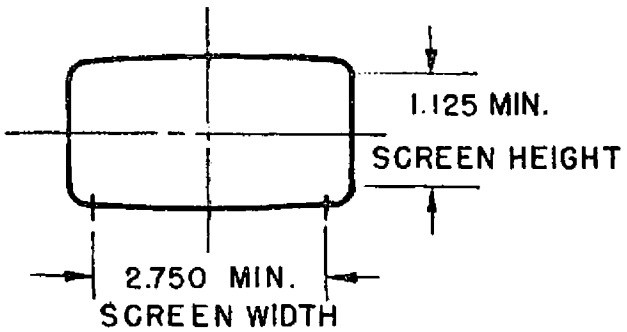

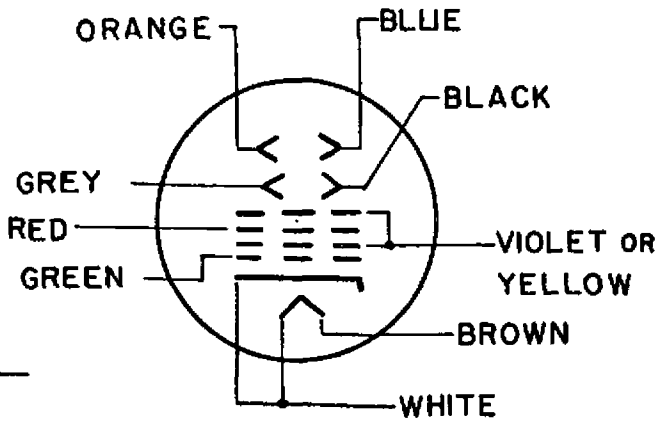

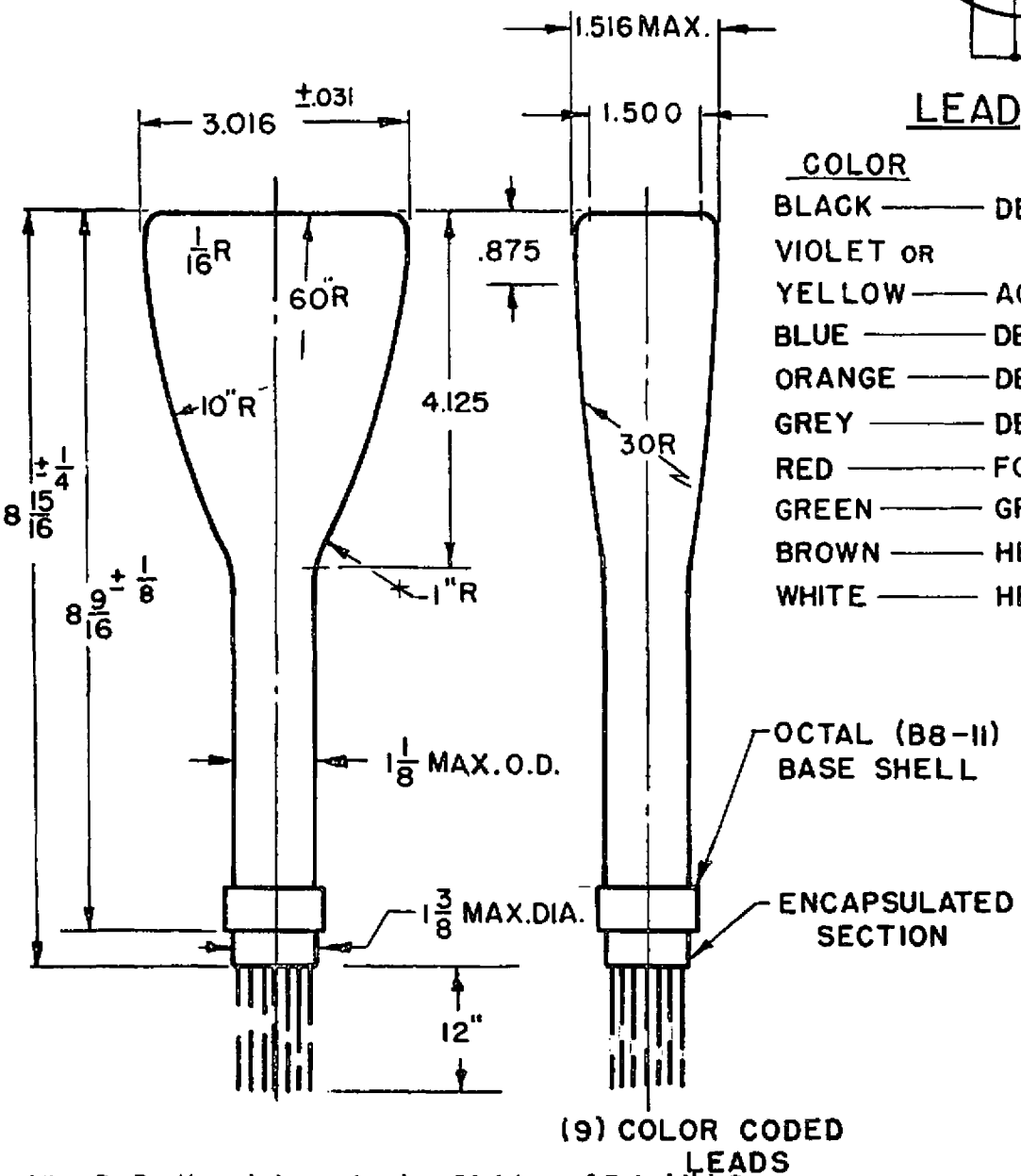

LEAD

COLOR	ELEMENT
BLACK	DEFL. ELECT. D4
VIOLET OR YELLOW	ACCELERATOR
BLUE	DEFL. ELECT. D1
ORANGE	DEFL. ELECT. D2
GREY	DEFL. ELECT. D3
RED	FOCUSING ELECT.
GREEN	GRID NO.1
BROWN	HEATER
WHITE	HEATER - CATHODE

DE-5633-3
10-18-60

Allen B. Du Mont Laboratories, ~~Inc.~~ Divisions of Fairchild Camera and Instrument Corp.
Clifton, New Jersey.

FORM 809-CS-4-55-SH