CHARACTERISTICS

GENERAL DATA

Focusing Method	Electrostatic
Deflection Method	Electrostatic

Types*	Fluorescence	Phosphorescence	Persistence
3BMP1	Green	——	Medium
3BMP2	Blue - Green	Green	Long
3BMP7	Blue - White	Yellow	Long
3BMP11	Blue	——	Short
3BMP12	Orange	Orange	Medium Long

Faceplate	Flat, Clear

* In addition to the types shown, the 3BMP- can be supplied with several other screen phosphors.

ELECTRICAL DATA

Heater Voltage	1.5 Volts
Heater Current	0.14 ±10% Ampere
Direct Interelectrode Capacitances (Maximum)	
Cathode to All Other Electrodes	4.2 μμf
Grid to All Other Electrodes	5.8 μμf
Between Deflecting Plates 1-2	2.1 μμf
Between Deflecting Plates 3-4	1.5 μμf
Deflecting Plate 1 to All Other Electrodes	5.8 μμf
Deflecting Plate 2 to All Other Electrodes	5.8 μμf
Deflecting Plate 3 to All Other Electrodes	4.5 μμf
Deflecting Plate 4 to All Other Electrodes	4.5 μμf

MECHANICAL DATA

Minimum Useful Screen Diameter	2.68 Inches
Bulb Contact (Recessed Small Ball Cap)	J1-22
Bulb	J24V
Base (Medium-Shell Diheptal 12-Pin)	B12-37
Basing	14J
Base Alignment	
D1-D2 trace aligns with Pin No. 5 and Tube Axis	±10 Degrees
Positive Voltage on D1 deflects beam approx. toward Pin No. 5	
Positive Voltage on D3 deflects beam approx. toward Pin No. 2	
Angle between traces D1-D2 and D3-D4	90 ±1 Degrees
Bulb Contact Alignment	
J1-22 contact aligns with D1-D2 trace	±10 Degrees
J1-22 contact on same side as Pin No. 5	

RATINGS

MAXIMUM RATINGS (Absolute Maximum Values)

Anode No. 3 Voltage	6600 Volts	dc
Anode No. 2 Voltage	2200 Volts	dc
Ratio Anode No. 3 to Anode No. 2 Voltage[1]	3.0	
Anode No. 2 Input (Av. except for 3BMP12)[2]	6.0 Watts	
Anode No. 1 Voltage (Focusing Electrode)	1500 Volts	dc
Grid No. 1 Voltage		
Negative Bias Value	200 Volts	dc
Positive Bias Value	0 Volts	dc
Positive Peak Value	0 Volts	
Peak Heater-Cathode Voltage		
Heater Negative with Respect to Cathode	50 Volts	
Heater Positive with Respect to Cathode	0 Volts	
Peak Voltage Between Anode No. 2 and Deflection Plate	550 Volts	

QUICK REFERENCE DATA

3" Direct Viewed
Round Glass Type
Electrostatic Deflection
Electrostatic Focus
Close Tolerances
Flat Face Plate
Post Deflection Acceleration
Very Low Heater Power

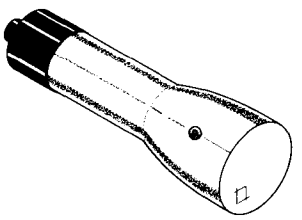

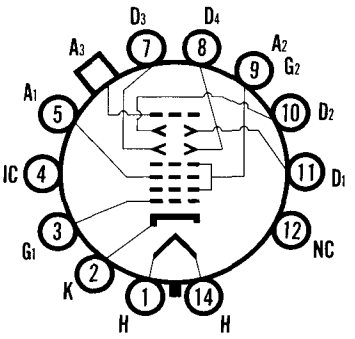

14-J

SYLVANIA
ELECTRONIC TUBES
A Division of
Sylvania Electric Products Inc.
PICTURE TUBE OPERATIONS
SENECA FALLS, NEW YORK

Prepared and Released By The
TECHNICAL PUBLICATIONS SECTION
EMPORIUM, PENNSYLVANIA

SEPTEMBER, 1960

File Under
SPECIAL AND GENERAL PURPOSE
CATHODE RAY TUBES

TYPICAL OPERATING CONDITIONS[2]

Anode No. 3 Voltage	4000	Volts	dc
Anode No. 2 Voltage	2000	Volts	dc
Anode No. 1 Voltage for Focus	375 to 575	Volts	dc
Grid No. 1 Voltage Required for Cutoff[3]	–45 to –75	Volts	dc
Deflection Factor			
Deflecting Plates 1-2	180 to 220	Volts	dc/Inch
Deflecting Plates 3-4	133 to 163	Volts	dc/Inch
Deflection Factor Uniformity[4]	2%		Max.
Pattern Distortion[5]	2%		Max.
Modulation at Anode No. 3 Current = 25μAdc[4]	38	Volts	dc Max.
Line Width "A" at Anode No. 3 Current = 25μAdc	.016	Inches	Max.
Light Output at Anode No. 3 Current = 25μAdc[6] (3BMP1)	20	Foot Lamberts	Min.
Spot Position[7]	Within a 10	mm Square	

CIRCUIT VALUES

Grid Circuit Resistance	1.5	Megohms	Max.
Deflection Circuit Resistance[8]	1.0	Megohms	Max.

NOTES:

1. *These types are designed for optimum performance when operating at EB3/EB2 ratio of 2.0.*
2. *Type 3BMP12 can be severely and permanently damaged if current density is allowed to rise too high. Test and operate at minimum usable currents.*
3. *Visual extinction of undeflected focused spot.*
4. *Per MIL-E-1 specifications.*
5. *All portions of a raster pattern, adjusted so its widest points just touch the sides of a 1.938 inch square, will fall within the area bounded by the 1.938 inch square and an inscribed 1.862 inch square.*
6. *Measured in accordance with MIL-E-1 specifications using a raster size of 1⅞ x 1⅞ inches.*
7. *With tubes magnetically shielded, deflecting plates connected to Anode No. 2, and spot focused. Limit square centered on tube face, with sides parallel to deflection axes.*
8. *It is recommended that the deflecting electrode circuit resistance be approximately equal. Higher resistance values up to five megohms may be used for low beam current operation.*
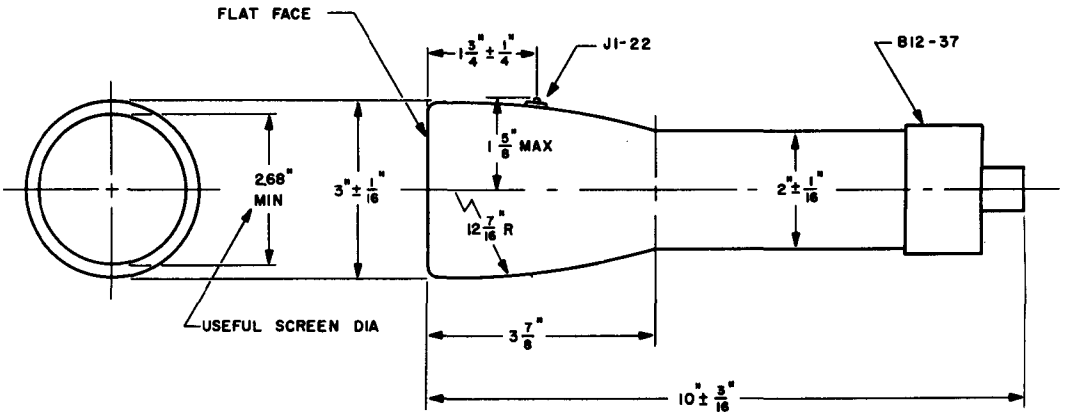
OUTLINE