# XENON FILLED RECTIFIER

**Service Type CV3815** **American Designation 3B22**

## INTRODUCTION

The 3B22 is a hot cathode, full wave, Xenon filled Rectifier with maximum ratings of 725V peak inverse voltage and 4·0A peak current.

## GENERAL DATA

**(See also Preamble to Rectifier Section of this Catalogue)**

### Electrical

| | | |
|---|---|---|
| Filament | Oxide Coated | |
| Filament Voltage | 2·5 | V |
| Filament Current | 6·25 A Approx | |
| Min Filament Heating Time | 20 | secs |
| Ambient Temperature Range | −55 to +75 | °C |
| Max Peak Inverse Voltage | 725 | V |
| Max Anode Current (per anode): | | |
| Peak | 4·0 | A |
| Mean (4·5 secs averaging time) | 0·5 | A |
| Under Fault Conditions (0·1 second Max duration) | 60 | A |
| Max Power Supply Frequency | 250 | c/s |

### Mechanical

| | | |
|---|---|---|
| Overall Length | 6·00 inches (153 mm) | Max |
| Overall Diameter | 1·66 inches (42·1 mm) | Max |
| Net Weight | 3 ounces (90 gm) | Approx |
| Mounting Position | | Any |
| Base | Medium UX4 with bayonet | |
| Cooling | | Natural |

# XENON FILLED RECTIFIER

## MAXIMUM OPERATING CONDITIONS
**(Absolute Values—see Preamble)**

**D.C. Output with choke input filter and delayed H.T. switching**

| Circuit | * Diagram | Peak Inverse Voltage (up to 250c/s) V | Anode Current in Amperes | | Transformer Secondary Voltage (R.M.S.) V | Max D.C. Output | |
|---|---|---|---|---|---|---|---|
| | | | Peak | Mean‡ | | V | Amps |
| Single Phase Full Wave | A | 725 | 4 | 0·5 | 255 | 230 | 1·0 |
| Single Phase Full Wave Bridge | B | 725 | 4 | 0·5 | 510 | 460 | 1·0 |
| Three Phase Full Wave | D | 725 | 4 | 0·5 | 295 | 690 | 1·5 |

* For diagrams see Typical Rectifier Circuits for Choke Input Filters in the preamble to this section of the catalogue.

‡Mean anode currents are averaged over any period of 4·5 seconds.

# XENON FILLED RECTIFIER

## OUTLINE

496

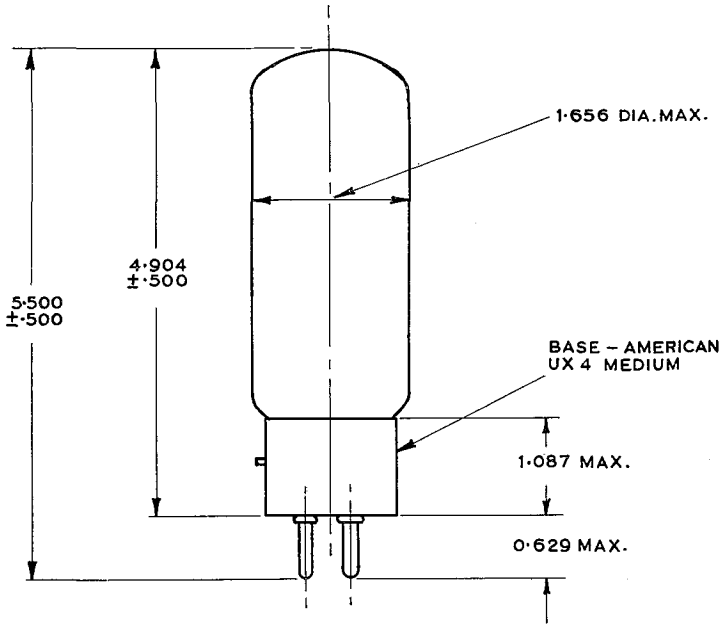


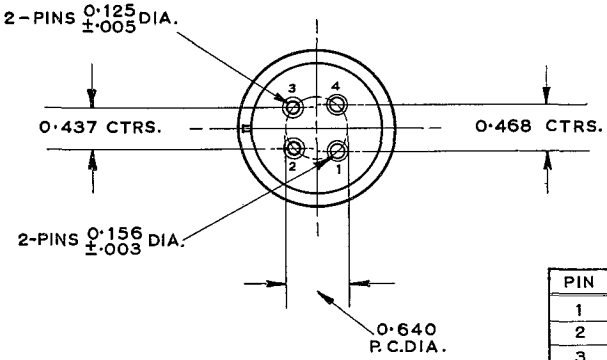


| PIN | ELEMENT |
|---|---|
| 1 | FILAMENT |
| 2 | ANODE |
| 3 | ANODE |
| 4 | FILAMENT |

ALL DIMENSIONS IN INCHES

ENGLISH ELECTRIC VALVE CO. LTD.
CHELMSFORD ESSEX, ENGLAND TECHNICAL PUBLICATIONS
Printed in England