from JETEC release
#2067, Dec. 30, 1957

DU MONT

TYPE 3AKP-A CATHODE-RAY TUBE

TENTATIVE

The Du Mont Type 3AKP-A is a 3-inch diameter, flat face, single beam, low voltage electrostatic focus, magnetic deflection cathode-ray tube. The bulb is an all-glass blank only 6 3/8 inches long, having a 7/8-inch diameter neck offset for sector scanning.

The Type 3AKP-A is particularly suitable for miniaturization techniques employed in airborne marine and portable radar receivers.

The screen is aluminized to provide high brightness and for stabilization of screen potential.

GENERAL CHARACTERISTICS

Electrical Data

Focusing Method	Electrostatic	
Deflecting Method	Magnetic	
Direct Interelectrode Capacitances, Approximate		
Cathode to all other electrodes	9.5	μμf
Grid #1 to all other electrodes	12.0	μμf

Optical Data

Phosphor Number	2	4	7	14	19	25
Fluorescent Color	Green	White	Blue	Purple	Orange	Orange
Phosphorescent Color	Green	----	Yellow	Orange	Orange	Orange
Persistence	Long	Short-to-Medium	Long	Medium-Long	Very Long	Very Long

Face Plate	Clear

Mechanical Data

Overall Length	6 3/8 ± 1/8	Inches
Greatest Diameter of Bulb	3 ± 1/16	Inches
Minimum Useful Screen Diameter	2 3/4	Inches
Bulb Contact	Special Molded Lead	
Base	Special Molded Base with Color Coded Leads	

DUMONT

TYPE 3AKP-A CATHODE-RAY TUBE

TENTATIVE

RATINGS (Design Center Values)

Heater Voltage	6.3	Volts
Heater Current at 6.3 Volts	0.3 ± 10%	Ampere
Accelerator Voltage	9,000	Max. Volts DC
Accelerator Input	6	Max. Watts
Focusing Electrode Voltage	-500 to +1,000	Max. Volts DC
Grid #2 Voltage	500	Max. Volts DC
Grid #1 Voltage		
Negative Bias Value	150	Max. Volts DC
Positive Bias Value	0	Max. Volts DC
Positive Peak Value	0	Max. Volts
Peak Heater-Cathode Voltage		
Heater Negative with respect to cathode	180	Max. Volts
Heater Positive with respect to cathode	180	Max. Volts

TYPICAL OPERATING CONDITIONS

Accelerator Voltage	7,000	Volts DC
Focusing Electrode Voltage[1]	-105 to +250	Volts DC
Grid #2 Voltage	300	Volts DC
Grid #1 Voltage[2]	-45 to -95	Volts DC
Modulation [3]	33	Volts Max.
Line Width A[3]	0.011	Inch Max.
Focusing Electrode Current for any operating condition	-15 to +15	Microamperes

MAXIMUM CIRCUIT VALUES

Grid #1 Circuit Resistance	1.5	Max. Megohms

NOTES

1. With the Grid #1 bias voltage adjusted to give an accelerator current of 50 microamperes on a 2 x 2-inch raster pattern.

2. Visual extinction of undeflected focused spot.

3. Measured in accordance with MIL-E-1 specifications with an accelerator current of 50 microamperes.

Allen B. Du Mont Laboratories, Inc.
Passaic, New Jersey

FORM 809 C5 5-54-5M

DUMONT

3AKP-
CATHODE - RAY TUBE

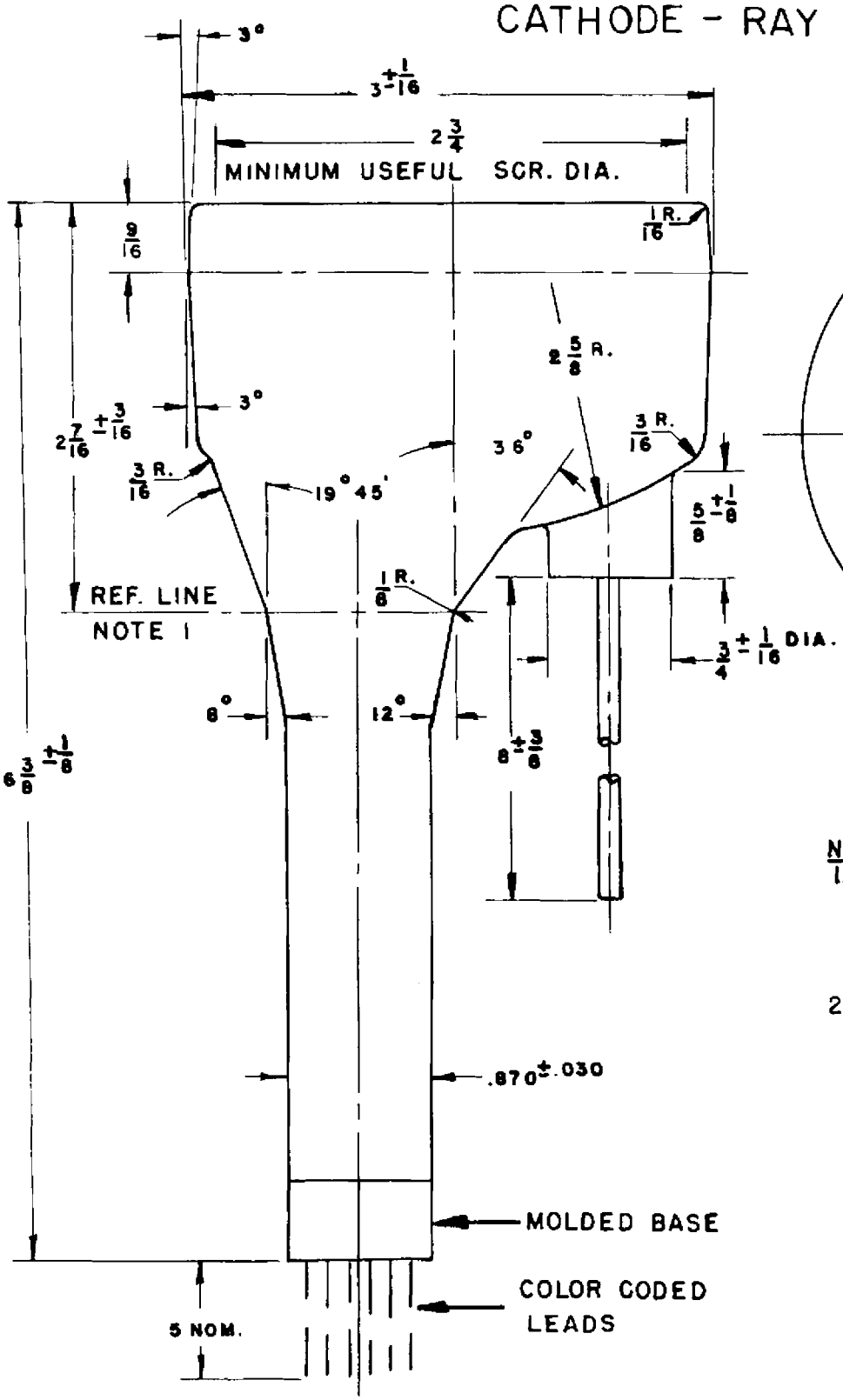

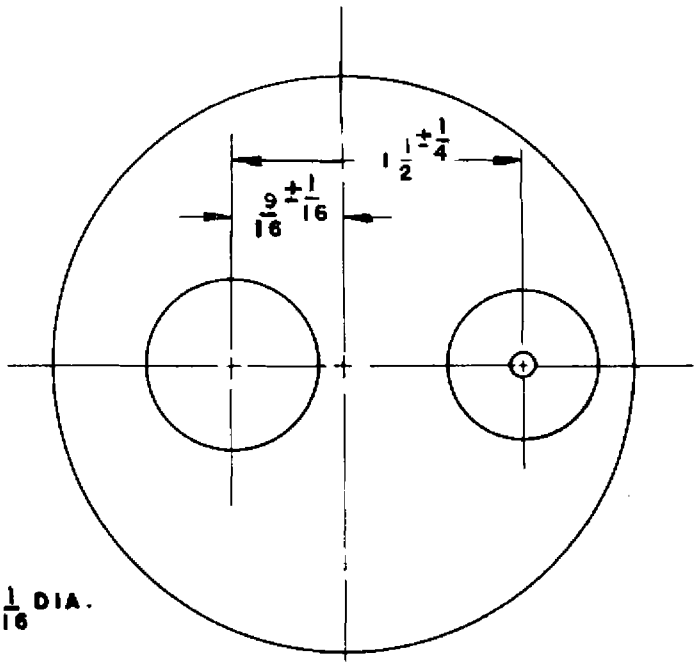

BOTTOM VIEW

NOTE:

1. REF. LINE IS THAT POINT WHERE A $1.000^{+.003}_{-.000}$ INCH DIA. RING GAGE $1\frac{1}{2}$ INCHES LONG WILL STOP

2. BASING

BLACK	HEATER
BLACK	HEATER
YELLOW	CATHODE
GREEN	GRID NO. 1
BLUE	GRID NO. 2
RED	FOCUSING ELECTRODE

MOLDED LEAD, ACCELERATOR

Allen B. Du Mont Laboratories, Inc.
Clifton, New Jersey

FORM 809-C8-4-55-9M