WATERMAN PRODUCTS COMPANY
INCORPORATED
2445-63 EMERALD STREET
PHILADELPHIA 25, PA., U. S. A.

3AHP1,2,7,11

CATHODE RAY TUBE-RECTANGULAR

ELECTRICAL DATA

Focusing Method	electrostatic	
Deflection Method	electrostatic	
Direct Interelectrode Capacitances		
Cathode to all other electrodes	4.0	uuf
Grid #1 to all other electrodes	11.0	uuf
D1 to D2	4.0	uuf
D3 to D4	4.0	uuf
D1 to all other electrodes except D2	15.0	uuf
D2 to all other electrodes except D1	11.0	uuf
D3 to all other electrodes except D4	10.0	uuf
D4 to all other electrodes except D3	11.0	uuf

OPTICAL DATA

Phosphor Number	P_1	P_2	P_7	P_{11}
Fluorescent Color	Green	Green	Blue	Blue
Phosphorescent Color		Green	Yellow	
Persistence	Medium	Long	Long	Short

MECHANICAL DATA

Overall Length	9.12 ±.25	inches
Greatest Dimensions of Bulb		
Diagonal	3.34 ±.0312	inches
Width	3 ±.047	inches
Height	1.469 ± 047	inches
Minimum Useful Screen Diameter		
Diagonal	3.15	inches
Width	2.75	inches
Height	1.125	inches
Base	B12-43	
Basing	12E	
Base Alignment		
Vertical trace aligns with pin #1 and tube axis.	0±10	degrees
Positive voltage on D1 deflects beam approximately towards pin #4.		
Positive voltage on D3 deflects beam approximately towards pin #1.		
Angle between D3D4 and D1D2 traces	90 ± 1	degrees

from JETEC release #1924, May 13, 1957

RATINGS (Design Center Value)

Heater Voltage	6.3	volts
Heater Current at 6.3 volts	.6 ±10%	amperes
Anode Voltage	2750	max volts DC
Anode Input	6	max watts
Anode #1 (Focusing Electrode Voltage)	1100	max volts DC
Grid #1 Voltage		
Negative-bias value	200	max volts DC
Positive-bias value	0	max volts DC
Positive-peak value	2	max volts
Peak-Heater-Cathode Voltage		
Heater negative with respect to cathode		
During warmup period not to exceed 15 seconds	410	max volts
After equipment warmup period	125	max volts
Heater positive with respect to cathode	125	max volts
Peak Voltage between Anode and any Deflection Electrode	550	max volts

TYPICAL OPERATING CONDITIONS

Anode #2 Voltage	1000	2000	volts
Anode #1 Voltage	165 to 310	330 to 620	volts
Grid #1 Voltage(Note 1)	-29 to -67.5	-58 to -135	volts
Deflection Factors			
D1 and D2	73 to 99	146 to 198	volts DC/in
D3 and D4	26 to 35	52 to 70	volts DC/in
Focusing Electrode Current for any operating condition	-15 to ±10		microamp
Spot Position(undeflected)(note 2)	12		millimeters

NOTES

1- Visual extinction of undeflected focused spot.
2- Connect free deflecting electrodes to anode.

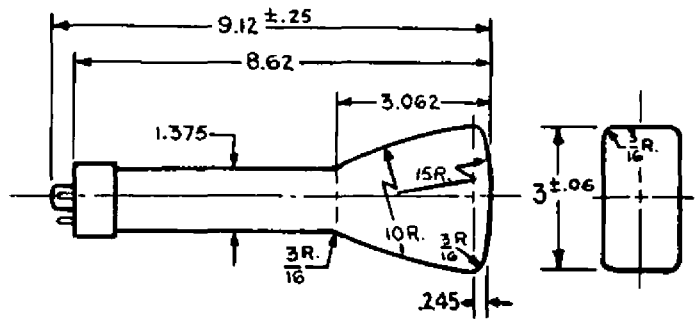

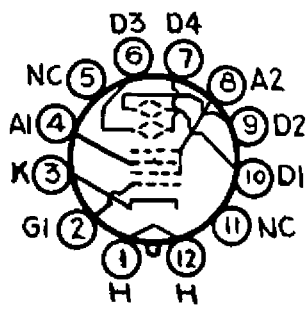

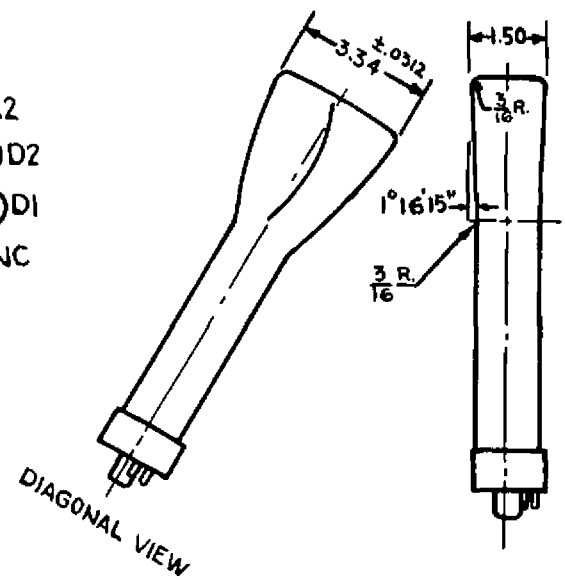

ALL DIMENSIONS ARE NOMINAL