SYLVANIA

engineering data service

SYLVANIA
3AP1A
3AP-A*

CHARACTERISTICS

GENERAL DATA

Focusing Method	Electrostatic
Deflecting Method	Electrostatic
Phosphor	P1
Fluorescence	Green
Persistence	Medium
Faceplate	Clear

**In addition to the type shown, the 3AP-A* can be supplied with several other screen phosphors.*

ELECTRICAL DATA

Heater Voltage	2.5 Volts
Heater Current (Approx.)	2.1 Ampere
Direct Interelectrode Capacitances (Approx.)	
Grid No. 1 to All Other Electrodes	9 $\mu\mu f$
Deflecting Plate 1[1] to All Other Electrodes	8.5 $\mu\mu f$
Deflecting Plate 3[1] to All Other Electrodes	6.5 $\mu\mu f$

MECHANICAL DATA

Minimum Useful Screen Diameter	2¾ Inches
Nominal Overall Length	11½ Inches
Base	Medium 7-Pin
Basing	7CE

RATINGS

MAXIMUM RATINGS (Absolute Maximum Values)

Anode No. 2 Voltage	1650 Volts	dc
Anode No. 1 Voltage	1100 Volts	dc
Grid No. 1 Voltage		
Negative Bias Value	125 Volts	dc
Positive Bias Value	0 Volts	dc
Peak Voltage Between Anode No. 2 and Any Deflecting Plate	550 Volts	

TYPICAL OPERATING CONDITIONS

Anode No. 2 Voltage[2]	1500 Volts	dc
Anode No. 1 Voltage	240 to 560 Volts	dc
Grid No. 1 Voltage Required for Cutoff[3]	−25 to −75 Volts	dc
Deflection Factor[4,5]		
Deflecting Plates 1-2[6]	90 to 137 Volts dc/Inch	
Deflecting Plates 3-4[7]	88 to 130 Volts dc/Inch	

CIRCUIT VALUES

Grid No. 1 Circuit Resistance	1.5 Megohms Max.
Deflection Circuit Resistance	5.0 Megohms Max.

QUICK REFERENCE DATA

3" Direct Viewed

Round Glass Type

Electrostatic Deflection

Electrostatic Focus

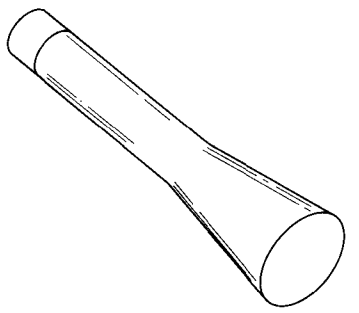

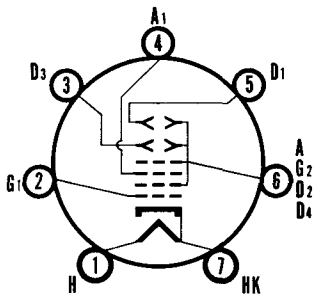

7-CE

SYLVANIA
ELECTRONIC TUBES

A Division of
Sylvania Electric Products Inc.
PICTURE TUBE OPERATIONS
SENECA FALLS, NEW YORK

Prepared and Released By The
TECHNICAL PUBLICATIONS SECTION
EMPORIUM, PENNSYLVANIA

NOVEMBER, 1958

NOTES:

1. *With D2 positive with respect to D1, the spot is deflected toward Pin No. 1.*
   With D4 positive with respect to D3, the spot is deflected toward Pin No. 6.
2. *Brilliance and definition decrease with decreasing Anode No. 2 Voltage. In general, Anode No. 2 Voltage should not be less than 1,000 Volts.*
3. *Visual extinction of undeflected focused spot.*
4. *The plane through the tube axis and Pin 6 may vary from the trace produced by Deflecting Plates 3-4 by an angular tolerance measured about the tube axis; of 10 degrees.*
5. *Angle between D1-D2 trace and D3-D4 trace is 90° ± 3°.*
6. *Deflecting Plates 1-2 are nearer the screen.*
7. *Deflecting Plates 3-4 are nearer the base.*

3AP1

Sylvania Type 3AP1A replaces Type 3AP1.

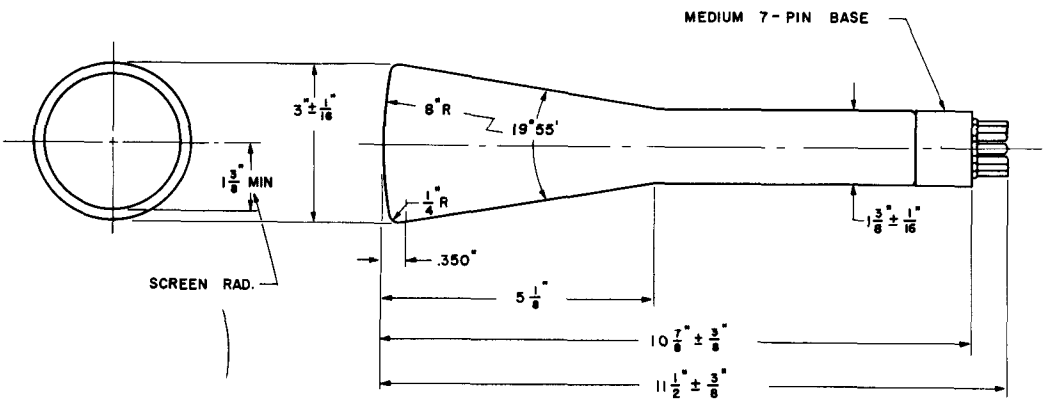

S 58002