SYLVANIA

engineering data service

SYLVANIA

3ACP1A
3ACP-A*

CHARACTERISTICS

GENERAL DATA

Focusing Method			Electrostatic
Deflection Method			Electrostatic
Types*	Fluorescence	Phosphorescence	Persistence
3ACP1A	Green	.....	Medium
3ACP2A	Blue-Green	Green	Long
3ACP7A	Blue-White	Yellow	Long
3ACP11A	Blue	.....	Short
3ACP12A	Orange	Orange	Medium Long
Faceplate			Flat, Clear

**In addition to the types shown, the 3ACP-A can be supplied with several other screen phosphors.*

ELECTRICAL DATA

Heater Voltage	6.3 Volts
Heater Current	0.6 ± 10% Ampere
Direct Interelectrode Capacitances (Maximum)	
Cathode to All Other Electrodes	4.2 μμf
Grid to All Other Electrodes	5.5 μμf
Between Deflecting Plates 1-2	2.1 μμf
Between Deflecting Plates 3-4	1.5 μμf
Deflecting Plate 1 to All Other Electrodes	5.8 μμf
Deflecting Plate 2 to All Other Electrodes	5.8 μμf
Deflecting Plate 3 to All Other Electrodes	4.5 μμf
Deflecting Plate 4 to All Other Electrodes	4.5 μμf

MECHANICAL DATA

Minimum Useful Screen Diameter	2.68 Inches
Bulb Contact (Recessed Small Ball Cap)	J1-22
Bulb	J24V
Base (Medium-Shell Diheptal 12-Pin)	B12-37
Basing	14J
Base Alignment	
D1-D2 trace aligns with Pin No. 5 and Tube Axis	±10 Degrees
Positive Voltage on D1 deflects beam approx. toward Pin No. 5	
Positive Voltage on D3 deflects beam approx. toward Pin No. 2	
Angle between traces D1-D2 and D3-D4	90 ±1 Degrees
Bulb Contact alignment	
J1-22 contact aligns with D1-D2 trace	±10 Degrees
J1-22 contact on same side as Pin No. 5	

QUICK REFERENCE DATA

3" Direct Viewed
Round Glass Type
Electrostatic Deflection
Electrostatic Focus
Close Tolerances
Flat Face Plate
Post Deflection Acceleration

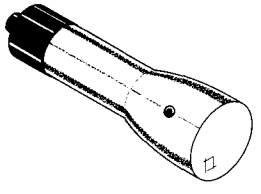

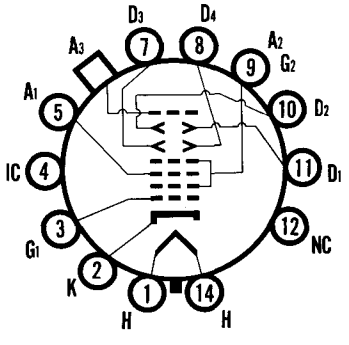

14-J

SYLVANIA
ELECTRONIC TUBES
A Division of
Sylvania Electric Products, Inc.

PICTURE TUBE OPERATIONS
SENECA FALLS, NEW YORK

Prepared and Released By The
TECHNICAL PUBLICATIONS SECTION
EMPORIUM, PENNSYLVANIA

JULY, 1959

RATINGS

MAXIMUM RATINGS (Absolute Maximum Values)

Anode No. 3 Voltage	6600	Volts	dc
Anode No. 2 Voltage	2200	Volts	dc
Ratio Anode No. 3 to Anode No. 2 Voltage[1]	3.0		
Anode No. 2 Input (Av. except for 3ACP12A)	6.0	Watts	
Anode No. 1 Voltage (Focusing Electrode)	1650	Volts	dc
Grid No. 1 Voltage			
Negative Bias Value	220	Volts	dc
Positive Bias Value	0	Volts	dc
Positive Peak Value	0	Volts	
Peak Heater-Cathode Voltage			
Heater Negative with Respect to Cathode	200	Volts	
Heater Positive with Respect to Cathode	200	Volts	
Peak Voltage Between Anode No. 2 and Any Deflection Plate	600	Volts	

TYPICAL OPERATING CONDITIONS[2]

Anode No. 3 Voltage	4000	Volts	dc
Anode No. 2 Voltage	2000	Volts	dc
Anode No. 1 Voltage for Focus	390 to 550	Volts	dc
Grid No. 1 Voltage Required for Cutoff[3]	−45 to −75	Volts	dc
Anode No. 3 Current[4]	500	μa	dc Min.
Cathode Current[5]	125	μa	dc Max.
Cathode Current[6]	600	μa	dc Max.
Deflection Factor			
Deflecting Plates 1-2	175 to 205	Volts	dc/Inch
Deflecting Plates 3-4	138 to 158	Volts	dc/Inch
Deflection Factor Uniformity[7]	2%	Max.	
Pattern Distortion[8]	2%	Max.	
Modulation at Anode No. 3 Current = 25 μAdc[7]	21	Volts	dc Max.
Modulation at Anode No. 3 Current = 200 μAdc[7] (Except 3ACP12A)	45	Volts	dc Max.
Line Width "A" at Anode No. 3 Current = 5 μa (3ACP12A)	.012	Inches	Max.
Line Width "A" at Anode No. 3 Current = 50 μAdc[7] (Except 3ACP12A)	.016	Inches	Max.
Line Width "A" at Anode No. 3 Current = 200 μAdc[7] (Except 3ACP12A)	.028	Inches	Max.
Light Output at Anode No. 3 Current = 100 μAdc[9]			
3ACP1A	80	Foot Lamberts	Min.
3ACP11A	35	Foot Lamberts	Min.
Spot Position (Focused and Undeflected)[10] Within a 3/16 Inch Radius Circle			

CIRCUIT VALUES

Grid Circuit Resistance	1.5	Megohms	Max.
Deflection Circuit Resistance[11]	1.0	Megohms	Max.

NOTES:

1. *These types are designed for optimum performance when operating at EB3/EB2 ratio of 2.0.*
2. *Type 3ACP12A can be severely and permanently damaged if current density is allowed to rise too high. Test and operate at minimum usable currents.*
3. *Visual extinction of undeflected focused spot.*
4. *At EG1 = 0 V dc.*
5. *At IB3 = 50 μa dc.*
6. *At IB3 = 200 μa dc.*
7. *Per MIL-E-1 specifications.*
8. *All portions of a raster pattern, adjusted so its widest points just touch the sides of a 1.938 inch square, will fall within the area bounded by the 1.938 inch square and an inscribed 1.862 inch square.*
9. *Measured in accordance with MIL-E-1 specifications using a raster size of 17/8 x 17/8 inches. The P11 phosphor is measured with a photronic cell without eye correction.*
10. *Centered with respect to tube face and with tube shielded. Connect deflecting plates to Anode No. 2.*
11. *It is recommended that the deflecting electrode circuit resistance be approximately equal. Higher resistance values up to five megohms may be used for low beam current operation.*

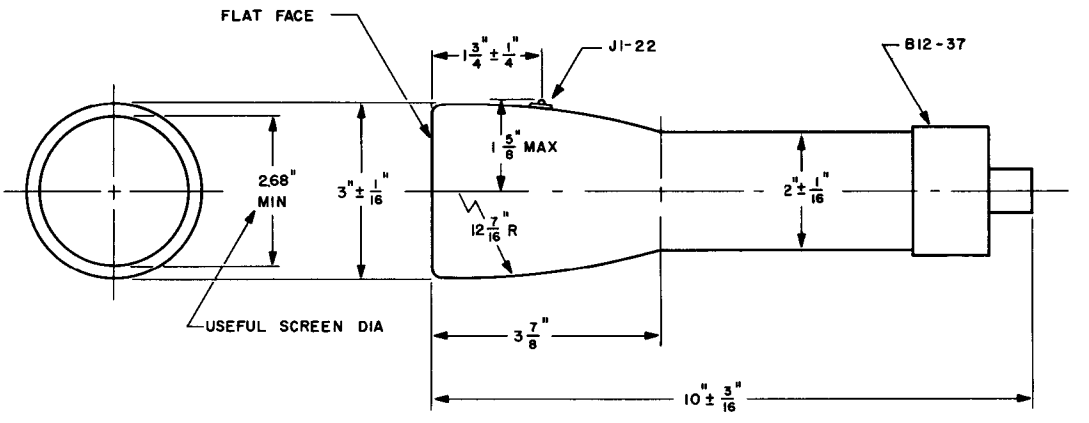

S 58058

A Technical Publication of

SYLVANIA ELECTRIC
PRODUCTS INC.

EMPORIUM, PA.